Drawer runners for wooden drawers





Hettich

Your contact:

United Kingdom Head Office
Hettich UK
Unit 200
Metroplex Business Park
Broadway
Salford
Manchester
M50 2UE

Tel: 0161 872 9552

E-mail: info@uk.hettich.com

www.hettich.com

Printed 2025

Runner systems for wooden drawers

Summary of ranges

Actro drawer runners
Summary **2 – 14**



Quadro drawer runners
Summary **16 – 38**



KA ball bearing runners
Summary **39 – 51**



Big Org@Tower Wood
Summary **52 – 67**



Locking system for drawers
Summary **68 – 79**



Accessories **80 – 84**





Precision that gets things moving

The Actro 5D drawer runner is simply the perfect choice for unique furniture design, narrow reveals and large front panels. Adjusting in 5 directions, front panel reveal alignment meets the most exacting demands. Excellent running performance and incredible stability provide supreme quality you can feel and hear.

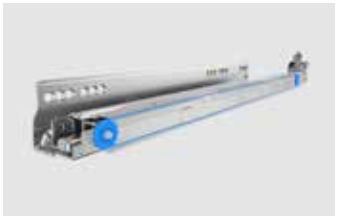

Fascinate with smoothly running drawers:
Actro 5D, smooth running and synchronised.



Fascinate with narrow reveals:
5-way adjustment for extremely narrow reveals.



Impress with stability:
Load capacity up to 70 kg.

hettich.com/short/ba9fb5

Find out more:
You can get inspiration and further product details on our website.



Actro 5D full extension runners with Silent System
Range summary / technical comparison **6 – 7**



Actro YOU
Range summary / technical comparison **8 – 9**



Actro 5D full extension runners with Silent System, bottom panel installation
Range summary / technical comparison **10 – 11**



Push to open Silent for Actro 5D and Actro YOU
Range summary / technical comparison **12 – 13**

Quality criteria **70**

Hettich Technical Assistant
- **Installation**
- **Settings**
- **Service**

hettich.com/short/cb3246

	Actro 5D with Silent System	Actro YOU	Actro 5D bottom panel installation
			
Page	6 - 7	8 - 9	10 - 11
Description	Full extension runner with integrated Silent System	Full extension runner with integrated Silent System	Full extension runner with integrated Silent System
User friendly features	Silent System	Silent System	Silent System
Installation	▸ On cabinet body side ▸ Slide on installation	▸ On cabinet body side ▸ Slide on installation	▸ On cabinet body bottom panel ▸ Slide on installation
Adjustment	▸ Height ▸ Side ▸ Tilt ▸ Radial	▸ Height	▸ Height ▸ Side ▸ Tilt ▸ Radial
Load class	▸ XS (10 kg) ▸ L (40 kg) ▸ XL (70 kg)	▸ XS (10 kg) ▸ L (40 kg) ▸ XL (70 kg)	▸ L (40 kg)
Drawer lengths	▸ XS: 250 - 350 mm ▸ L: 250 - 600 mm ▸ XL: 450 - 750 mm	▸ XS: 270 - 350 mm ▸ L: 270 - 600 mm ▸ XL: 450 - 650 mm	▸ L: 350 - 500 mm
Minimum cabinet depth	NL + 3 mm	NL + 3 mm	NL + 3 mm
Installed width (side profile thickness)	EB21 (≤ 16 mm drawer side profile thickness)	EB21 (≤ 16 mm drawer side profile thickness)	EB21 (≤ 16 mm drawer side profile thickness)
Accessories	▸ Catches ▸ Depth adjustment ▸ Push to open Silent ▸ Pull-out shelf support ▸ Pull-out shelf locating catch	▸ Catches ▸ Depth adjustment ▸ Push to open Silent ▸ Pull-out shelf support ▸ Pull-out shelf locating catch	▸ Catches ▸ Depth adjustment ▸ Push to open Silent ▸ Pull-out shelf support ▸ Pull-out shelf locating catch

Push to open Silent

12 - 13
Opening system for optionally upgrading
-
▸ Can be clipped on without tools
▸ < 10 kg ▸ 8 - 20 kg ▸ 10 - 40 kg ▸ 20 - 70 kg
▸ For all nominal lengths 250 - 750 mm
▸ Synchronisation ▸ Multi synchronisation

Runner systems for wooden drawers

- **Actro 5D full extension runner with Silent System, optionally with Push to open Silent**
- **Load classes XS (10 kg) / L (40 kg) / XL (70 kg)**



- **Slide on installation** with catches
- Catch must be ordered separately
- Integrated **Silent System**
- Tool-less height adjustment up to + 3 mm, side adjustment up to +/- 1.5 mm, tilt adjustment up to + 4 mm and radial adjustment up to +/- 1.5 mm
- Optional: depth adjustment up to +/- 2 mm
- Optional: Push to open Silent opening system
- Optional: plug for pull-out shelves
- Optional: pull-out shelf locating catch
- Load capacity to EN 15338, Level 3
- Galvanised steel

Nominal length mm	**Order no. left and right**	PU	**Order no. / Mounting side left**	**right**	PU
Load class XS (10 kg)					
250	**9 318 230**	1 pair	**9 318 220**	**9 318 221**	10 ea.
270	**9 318 231**	1 pair	**9 318 222**	**9 318 223**	10 ea.
300	**9 318 232**	1 pair	**9 318 224**	**9 318 225**	10 ea.
320	**9 318 233**	1 pair	**9 318 226**	**9 318 227**	10 ea.
350	**9 318 234**	1 pair	**9 318 228**	**9 318 229**	10 ea.
Load class L (40 kg)					
250	**9 318 268**	1 pair	**9 318 235**	**9 318 236**	10 ea.
270	**9 318 269**	1 pair	**9 318 237**	**9 318 238**	10 ea.
300	**9 318 270**	1 pair	**9 318 239**	**9 318 240**	10 ea.
320	**9 318 281**	1 pair	**9 318 241**	**9 318 242**	10 ea.
350	**9 318 282**	1 pair	**9 318 243**	**9 318 244**	10 ea.
380	**9 318 283**	1 pair	**9 318 245**	**9 318 246**	10 ea.
400	**9 318 284**	1 pair	**9 318 247**	**9 318 248**	10 ea.
420	**9 318 285**	1 pair	**9 318 249**	**9 318 250**	10 ea.
450	**9 318 286**	1 pair	**9 318 251**	**9 318 252**	10 ea.
480	**9 318 287**	1 pair	**9 318 253**	**9 318 254**	10 ea.
500	**9 318 288**	1 pair	**9 318 256**	**9 318 258**	10 ea.
520	**9 318 289**	1 pair	**9 318 262**	**9 318 263**	10 ea.
550	**9 318 290**	1 pair	**9 318 264**	**9 318 265**	10 ea.
600	**9 318 291**	1 pair	**9 318 266**	**9 318 267**	10 ea.
Load class XL (70 kg)					
450	**9 318 310**	1 pair	**9 318 292**	**9 318 293**	10 ea.
500	**9 318 311**	1 pair	**9 318 294**	**9 318 295**	10 ea.
520	**9 318 312**	1 pair	**9 318 296**	**9 318 297**	10 ea.
550	**9 318 313**	1 pair	**9 318 298**	**9 318 299**	10 ea.
580	**9 318 314**	1 pair	**9 318 300**	**9 318 301**	10 ea.
600	**9 318 315**	1 pair	**9 318 302**	**9 318 303**	10 ea.
650	**9 318 316**	1 pair	**9 318 304**	**9 318 305**	5 ea.
700	**9 318 317**	1 pair	**9 318 306**	**9 318 307**	5 ea.
750	**9 318 318**	1 pair	**9 318 308**	**9 318 309**	5 ea.

Advice

- Push to open Silent 12 - 13
- Accessories 14
- Quality criteria 70

hettich.com/short/a9ab20

Runner systems for wooden drawers

- **Actro 5D full extension runner with Silent System, optionally with Push to open Silent**
- **Load classes XS (10 kg) / L (40 kg) / XL (70 kg)**

Catches



- Tool-less, intuitive side adjustment up to +/- 1.5 mm
- Height adjustment up to + 3 mm
- Plastic anthracite

Mounting side	Order no.	PU
left and right	**9 320 333**	1/5 pair
left	**9 320 334**	100 ea.
right	**9 320 335**	100 ea.

Depth adjustment



- Tool-less installation and adjustment up to +/- 2 mm
- For optional use with inset front panels
- Steel, grey plastic

Set comprises:
- 2 depth adjusters
- 2 activators

Order no.	PU
9 257 706	1 set

Front cross section

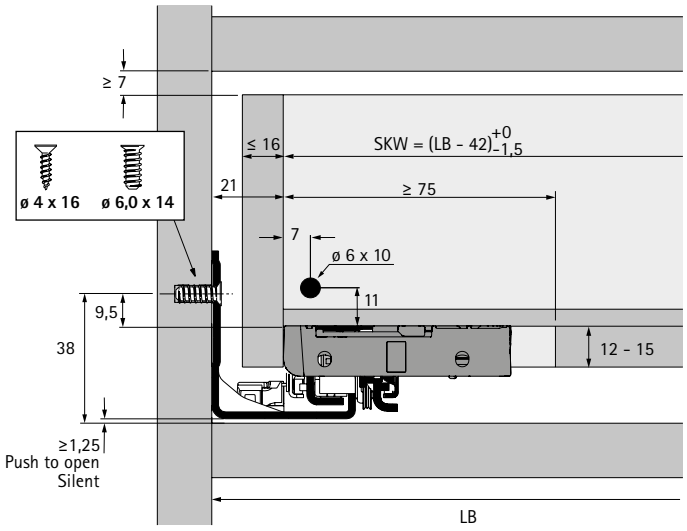

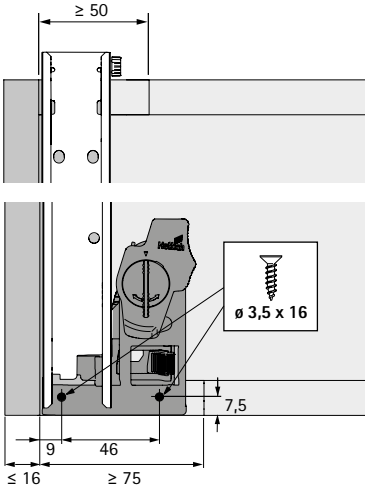

LB Clear inside width
SKW Internal drawer width

Side cross section

NL mm	b1 mm	b2 mm
250	160	
270	160	
300	160	
320	224	
350	224	
380	224	
400	224	
420	224	
450	256	288
480	256	
500	256	320
520	256	320
550	256	320
580	256	320
600	256	320
650	256	416
700	256	416
750	256	416

NL Nominal length
LT Clear inside depth
SKL Drawer length

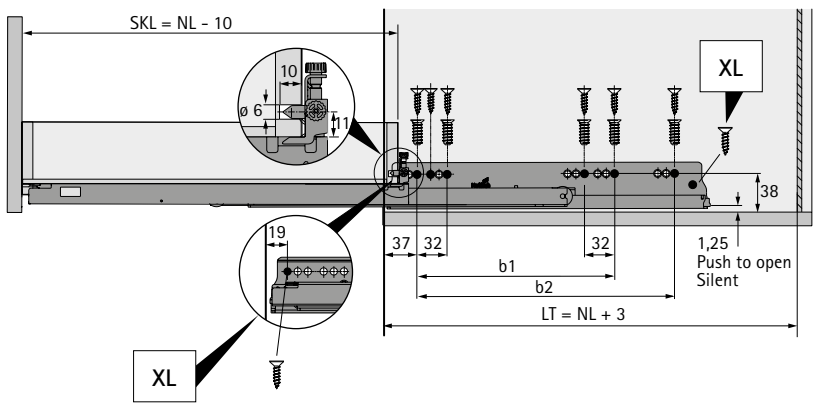

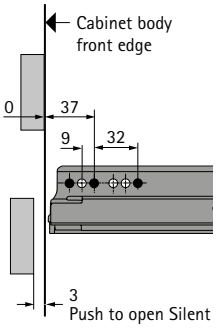

- **Actro YOU drawer runner with Silent System, optionally available with Push to open Silent**
- **Load classes XS (10 kg) / L (40 kg) / XL (70 kg)**

11 A Actro YOU drawer runner with Silent System



- **Slide on installation** with catches, Catch must be ordered separately
- Integrated **Silent System**
- Load classes XS (10 kg) / L (40 kg) / XL (70 kg)
- Load capacity to EN 15338, Level 3
- Galvanised steel
- Optional: depth adjustment up to +/- 2 mm
- Optional: Push to open Silent opening system
- Optional: pull-out shelf support
- Optional: pull-out shelf locating catch

Nominal length mm	Order no. left and right	PU	Order no. / mounting side left	right	PU
Load class XS (10 kg)					
270	**9 318 154**	1 pair	**9 318 145**	**9 318 146**	10 ea.
300	**9 318 156**	1 pair	**9 318 147**	**9 318 148**	10 ea.
350	**9 318 160**	1 pair	**9 318 149**	**9 318 150**	10 ea.
Load class L (40 kg)					
270	**9 318 186**	1 pair	**9 318 167**	**9 318 170**	10 ea.
300	**9 318 187**	1 pair	**9 318 171**	**9 318 172**	10 ea.
350	**9 318 188**	1 pair	**9 318 173**	**9 318 174**	10 ea.
400	**9 318 190**	1 pair	**9 318 175**	**9 318 176**	10 ea.
450	**9 318 191**	1 pair	**9 318 177**	**9 318 178**	10 ea.
500	**9 318 192**	1 pair	**9 318 179**	**9 318 180**	10 ea.
550	**9 318 194**	1 pair	**9 318 181**	**9 318 182**	10 ea.
600	**9 318 196**	1 pair	**9 318 183**	**9 318 184**	10 ea.
Load class XL (70 kg)					
450	**9 318 215**	1 pair	**9 318 198**	**9 318 199**	10 ea.
500	**9 318 216**	1 pair	**9 318 201**	**9 318 203**	10 ea.
550	**9 318 217**	1 pair	**9 318 208**	**9 318 209**	10 ea.
600	**9 318 218**	1 pair	**9 318 211**	**9 318 212**	10 ea.
650	**9 318 219**	1 pair	**9 318 213**	**9 318 214**	5 ea.

Depth adjustment



- Tool-less installation and adjustment up to +4 mm
- For optional use with inset front panels
- Steel, grey plastic

Set comprises:
- 2 depth adjusters
- 2 activators

Order no.	PU
9 257 706	1 set

Catches



- For using Actro YOU with wooden drawers
- Height adjustment up to + 3 mm
- Plastic anthracite

Mounting side	Order no.	PU
left and right	**9 320 320**	5 pair
left	**9 320 331**	100 ea.
right	**9 320 332**	100 ea.

Runner systems for wooden drawers

- **Actro YOU drawer runner with Silent System, optionally available with Push to open Silent**
- **Load classes XS (10 kg) / L (40 kg) / XL (70 kg)**

Lengthwise cross-section

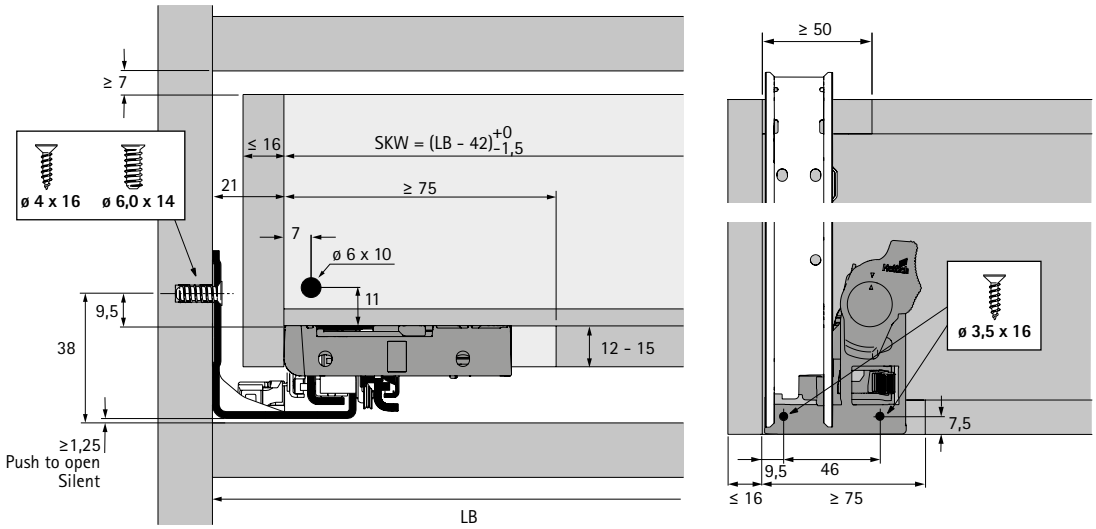

LB Clear inside width
SKW Internal drawer width

Lengthwise cross-section

NL mm	b1 mm	b2 mm
270	160	
300	160	
350	224	
400	224	
450	256	288
500	256	320
550	256	320
600	256	320
650	256	416

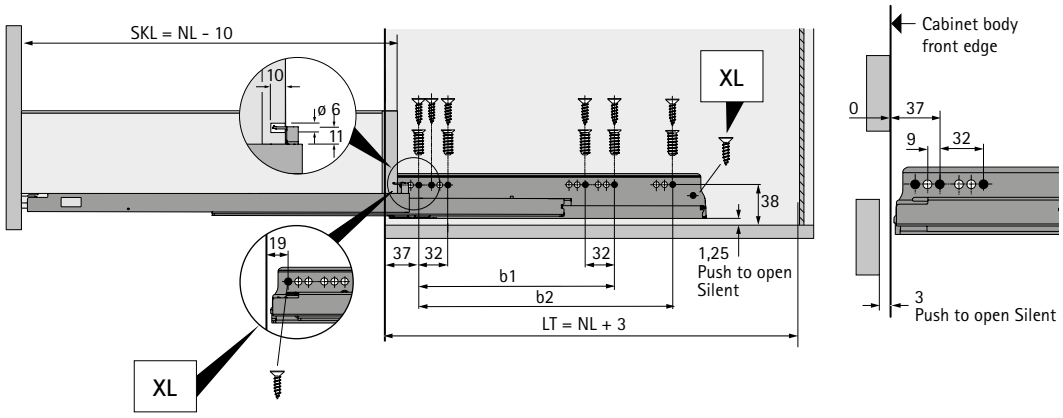

NL Nominal length
LT Clear inside depth
SKL Drawer length

Advice

- Push to open Silent 12 - 13
- Accessories 14
- Quality criteria 70

Actro 5D full extension runner bottom panel installation with Silent System, with optional Push to open Silent

Load class L (40 kg)



- **Slide on installation** with catches
- Catch must be ordered separately
- Integrated **Silent System**
- Tool-less height adjustment up to + 3 mm, side adjustment up to +/- 1.5 mm, tilt adjustment up to +/- 2 mm and radial adjustment up to +/- 1.5 mm
- Optional: depth adjustment up to +/- 2 mm
- Optional: Push to open Silent opening system
- Optional: pull-out shelf support
- Optional: pull-out shelf locating catch
- Load capacity to EN 15338, Level 3
- Galvanised steel

Nominal length mm	Order no. left and right	PU	Order no. / Mounting side left	right	PU
Load class L (40 kg)					
350	**9 318 327**	1 pair	**9 318 319**	**9 318 320**	10 ea.
400	**9 318 328**	1 pair	**9 318 321**	**9 318 322**	10 ea.
450	**9 318 329**	1 pair	**9 318 323**	**9 318 324**	10 ea.
500	**9 318 330**	1 pair	**9 318 325**	**9 318 326**	10 ea.

Advice

- Push to open Silent 12 - 13
- Accessories 14
- Quality criteria 70

hettich.com/short/a9ab20

Runner systems for wooden drawers

- **Actro 5D full extension runner bottom panel installation with Silent System, with optional Push to open Silent**
- **Load class L (40 kg)**

Catches



- Tool-less, intuitive side adjustment up to +/- 1.5 mm
- Height adjustment up to + 3 mm
- Plastic anthracite

Mounting side	Order no.	PU
left and right	**9 320 333**	1/5 pair
left	**9 320 334**	100 ea.
right	**9 320 335**	100 ea.

Depth adjustment



- Tool-less installation and adjustment up to +/- 2 mm
- For optional use with inset front panels
- Steel, grey plastic

Set comprises:
- 2 depth adjusters
- 2 activators

Order no.	PU
9 257 706	1 set

Front cross section

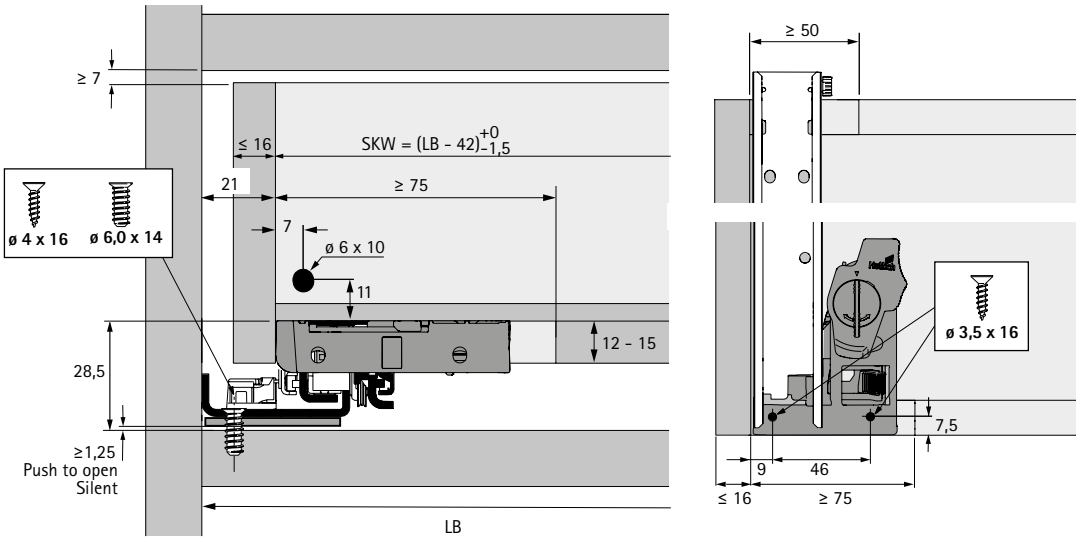

LB Светла ширина
SKW Ширина на чекмеджето

Side cross section

NL мм	b1 мм
350	256
400	256
450	256
500	256

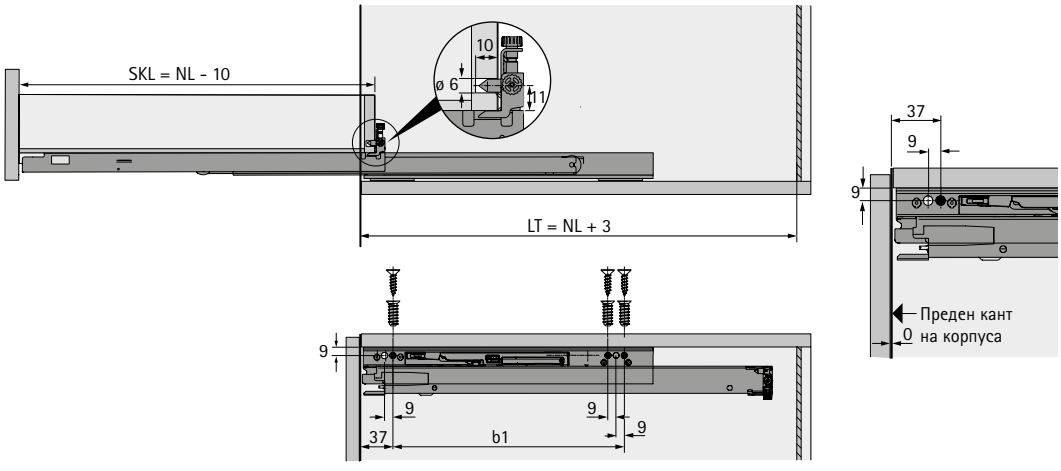

NL Номинална дължина
LT Светла дълбочина
SKL Дължина на чекмеджето

Push to open Silent opening system for Actro



- For optimum performance and activation, we recommend fitting an optional synchronisation function

Set comprises:
- 1 Push to open Silent unit, left and right
- 1 activator, left and right
- 2 adapters for synchronisation

Total weight kg	Load class Actro	Nominal length mm	**Order no.**	PU
< 10	XS (10 kg)	250 - 350	**9 257 890**	1 set
8 - 20	L (40 kg)	250 - 600	**9 257 891**	1 set
10 - 40	L (40 kg)	350 - 600	**9 257 892**	1 set
20 - 70	XL (70 kg)	450 - 750	**9 257 893**	1 set

Recommendation for drawer (front panel height up to approx. 150 mm)*

Nominal length mm	Nominal width mm												
	275	300	350	400	450	500	550	600	700	800	900	1000	1200
250 - 300													
320 - 350													
380 - 550													
580 - 750													

Recommendation for pot-and-pan drawer (front panel height up to approx. 300 mm, carrying medium load)*

Nominal length mm	Nominal width mm												
	275	300	350	400	450	500	550	600	700	800	900	1000	1200
250 - 300													
320 - 350													
380													
400 - 550													
580 - 750													

Recommendation for pot-and-pan drawer (front panel height up to approx. 300 mm, carrying heavy load, e.g. with stacks of plates)*

Nominal length mm	Nominal width mm												
	275	300	350	400	450	500	550	600	700	800	900	1000	1200
250 - 300													
320 - 350													
380													
400 - 550													
580 - 750													

Order no. Push to open Silent: **9 257 890** **9 257 891** **9 257 892** **9 257 893**

* Recommendations for applications (front panel 19 mm chipboard, normal household loading), please refer to our online configurator to get more exact recommendations for customer chosen front panel dimensions and materials.

Optional synchronisation for Push to open Silent

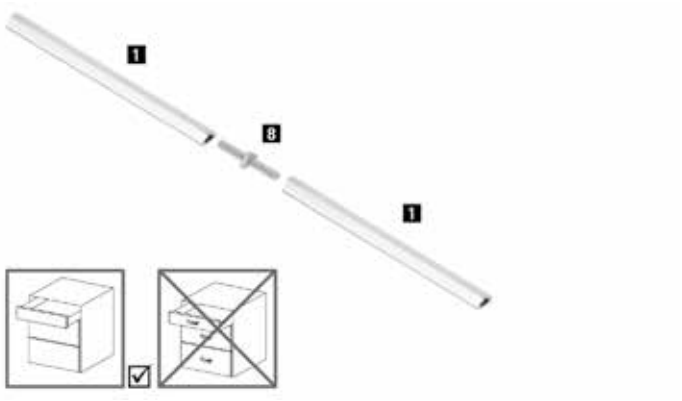

Synchronisation bar:
- For cutting to length, 1038mm
- Aluminium, anodised

Connector:
- For extending synchronisation bar / optimising synchronisation bar offcut waste
- Grey plastic

Article	Order no.	PU
1 Synchronisation bar 1038 mm	**9 236 181**	1/100 ea.
8 Connector	**9 221 295**	1/20 ea.

Optional multisynchronisation for Push to open Silent

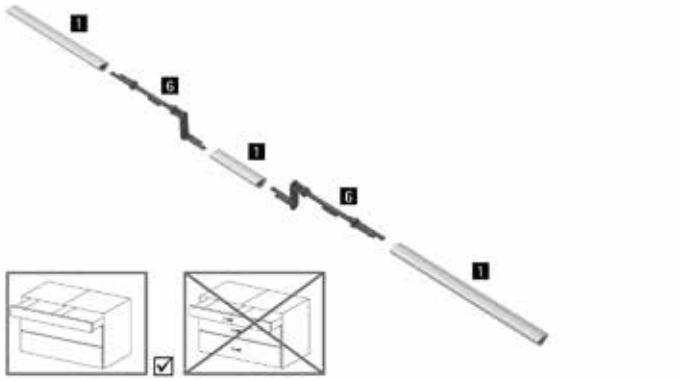

- For two drawers connected by one front panel
- Aluminium, anodised, grey plastic

Article	Order no.	PU
1 Synchronisation bar 1038 mm	**9 236 181**	1/100 ea.
6 Push to open Silent multi synchronisation adapter	**9 278 452**	1/20 ea.

Flexible adapter for Push to open Silent synchronisation

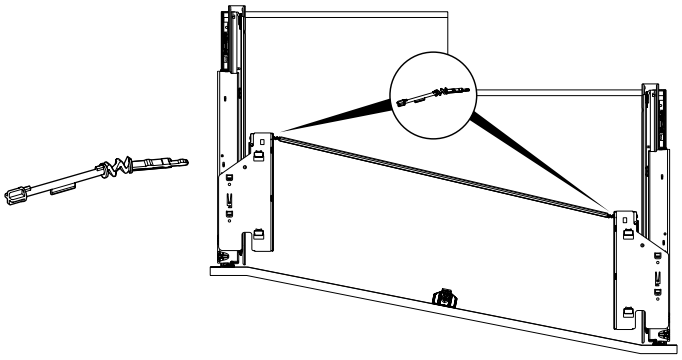

- For use in conjunction with lowered drawer runners with angled or curved fronts
- Depth offset max. 150 mm
- Angle at synchronisation bar max. 25 °
- Replaces the adapter for synchronisation in the Push to open Silent set

Order no.	PU
9 262 213	1/20 ea.

Deflector for Push to open Silent synchronisation

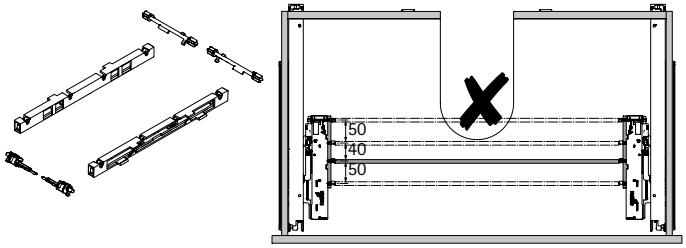

- For use, e.g. with U-bend applications
- Permits synchronisation in 3 different depth positions

Set comprises:
- 2 housings with premounted deflection bar
- 2 adapters for Push to open unit
- 2 adapters for synchronisation bar

Order no.	PU
9 278 453	1 set

Pull-out shelf support



- For pull-out shelves / drawers with flush bottom panel
- Nominal length (NL) is reduced by 20 mm
- Plastic, anthracite

Advice:
- Suitable for Actro 5D, Actro YOU, Quadro V6 YOU

Order no.	PU
9 257 733	1/100 set

Pull-out shelf locating catch, set



- Easy to add locating catch for pull-out shelves
- Automatically engages on pulling shelf out all the way
- Unlocks automatically in response to defined closing force
- Used instead of the standard fitted plug
- 1 mount, left and right, and 2 studs are required per pull-out shelf

Set comprises:
- 1 mount, left and right
- 2 studs

Advice:
- Suitable for Actro YOU, Actro 5D, Quadro YOU, Quadro V6 5D
- Drawer runners, catches and plugs must be ordered separately

Colour	Order no.	PU
white	**9 257 725**	1 set
anthracite	**9 257 727**	1 set



Quadro – better than the original

We have optimised our classic runner in every respect. Our new multidimensional adjustment system lets you build furniture with perfectly aligned doors and drawers showing minimal reveals. The platform concept allows you to choose whichever functionality you want. It's so easy, cost efficient and leaves plenty of scope to address different price levels.

Identical dimensions for wooden drawers and cabinet panel drilling – a standard for the new Quadro platform. Whichever runner you choose – Quadro is and will always be best in class. Made in Germany accompanied by short supply chains and top reliability in every respect. The original is now even better.



Time tested quality from the start - cost efficient entry level with the Quadro 25 2D partial extension runner.



The larger the drawer, the stronger the Quadro - perfect reveal alignment every time with the Quadro V6 5D full extension runner.



Concealed precision working components for added convenience with every day that passes.

hettich.com/short/008376

Find out more:
You can get inspiration and further product details on our website.



Quadro drawer runners
Range summary / technical comparison



Quadro full extension runners
- **Quadro V6 5D**
- **Quadro V6 YOU**



Quadro partial extension runners
- **Quadro 25 2D**
- **Quadro 25 YOU**



Push to open Silent
- **For Quadro V6 5D**
- **For Quadro V6 YOU**



Accessories
- **Synchronisation / multi synchronisation**
- **Pull-out shelf locating catch**
- **Other accessories**



Add on products
- **Assembly machinery**
- **Locking systems**

Hettich Technical Assistant
- **Installation / settings**
- **Service**

Quality criteria

hettich.com/short/e33065

	Quadro V6 5D with Silent System	Quadro V6 5D with Push to open	Quadro V6 YOU with Silent System
			
Page	22 - 24	22 - 24	26 - 28
Description	Full extension runner with integrated Silent System	Full extension runner with integrated opening system	Full extension runner with integrated Silent System
User friendly features	Silent System	Push to open	Silent System
Installation	▸ On cabinet body side ▸ Slide on installation	▸ On cabinet body side ▸ Slide on installation	▸ On cabinet body side ▸ Slide on installation
Adjustment	▸ Height ▸ Side ▸ Depth ▸ Tilt ▸ Radial	▸ Height ▸ Side ▸ Depth ▸ Tilt ▸ Radial	▸ Height
Load class	▸ XS (10 kg) ▸ M (30 kg)	▸ M (30 kg)	▸ XS (10 kg) ▸ M (30 kg)
Nominal length (NL)	250 - 600 mm	250 - 600 mm	250 - 600 mm
Drawer length (SKL)	240 - 590 mm (SKL = NL - 10 mm)	240 - 590 mm (SKL = NL - 10 mm)	240 - 590 mm (SKL = NL - 10 mm)
Minimum cabinet depth	Nominal length + 3 mm	Nominal length + 3 mm	Nominal length + 3 mm
Installed width (side profile thickness)	EB21 (≤ 16 mm drawer side profile thickness)	EB21 (≤ 16 mm drawer side profile thickness)	EB21 (≤ 16 mm drawer side profile thickness)
Accessories	▸ 2D catch ▸ Push to open Silent ▸ Synchronisation / Multi synchronisation ▸ Pull-out shelf support / Pull-out shelf locating catch	▸ 2D catch ▸ Synchronisation / Multi synchronisation ▸ Pull-out shelf support / Pull-out shelf locating catch	▸ YOU catch ▸ Push to open Silent ▸ Synchronisation / Multi synchronisation ▸ Pull-out shelf support / Pull-out shelf locating catch

Quadro V6 YOU with Push to open	Quadro 25 2D with Silent System	Quadro 25 2D with Push to open	Quadro 25 YOU with Silent System
			
26 - 28	30 - 31	30 - 31	32 - 33
Full extension runner with integrated opening system	Partial extension runner with integrated Silent System	Partial extension runner with integrated opening system	Partial extension runner with integrated Silent System
Push to open	Silent System	Push to open	Silent System
▸ On cabinet body side ▸ Slide on installation	▸ On cabinet body side ▸ Slide on installation	▸ On cabinet body side ▸ Slide on installation	▸ On cabinet body side ▸ Slide on installation
▸ Height	▸ Height ▸ Side	▸ Height ▸ Side	▸ Height
▸ M (30 kg)	▸ S (25 kg)	▸ S (25 kg)	▸ S (25 kg)
250 - 600 mm	270 - 550 mm	270 - 550 mm	270 - 550 mm
240 - 590 mm (SKL = NL - 10 mm)	260 - 540 mm (SKL = NL - 10 mm)	260 - 540 mm (SKL = NL - 10 mm)	260 - 540 mm (SKL = NL - 10 mm)
Nominal length + 3 mm	Nominal length + 3 mm	Nominal length + 3 mm	Nominal length + 3 mm
EB21 (≤ 16 mm drawer side profile thickness)	EB21 (≤ 16 mm drawer side profile thickness)	EB21 (≤ 16 mm drawer side profile thickness)	EB21 (≤ 16 mm drawer side profile thickness)
▸ YOU catch ▸ Synchronisation / Multi synchronisation ▸ Pull-out shelf support / Pull-out shelf locating catch	▸ 2D catch ▸ Pull-out shelf support	▸ 2D catch ▸ Synchronisation / Multi synchronisation ▸ Pull-out shelf support	▸ YOU catch ▸ Pull-out shelf support

	Quadro 25 YOU with Push to open	Push to open Silent	Synchronisation / multi synchronisation
			
Page	32 - 33	34	35 - 37
Description	Partial extension runner with integrated opening system	Optional for: ▸ Quadro V6 5D with Silent System ▸ Quadro V6 YOU with Silent System	Optional for: ▸ Push to open ▸ Push to open Silent
User friendly features	Push to open	Push to open Silent	-
Installation	▸ On cabinet body side ▸ Slide on installation	▸ Tool-less clip on	▸ Tool-less clip on
Adjustment	▸ Height		
Load class	▸ S (25 kg)	Depending on runner system and drawer load	
Nominal length (NL)	270 - 550 mm		
Drawer length (SKL)	260 - 540 mm (SKL = NL - 10 mm)		
Minimum cabinet depth	Nominal length + 3 mm		
Installed width (side profile thickness)	EB21 (≤ 16 mm drawer side profile thickness)		
Accessories	▸ YOU catch ▸ Synchronisation / Multi synchronisation ▸ Pull-out shelf support	▸ Synchronisation / multi synchronisation ▸ Flexible adapter ▸ Deflection	

Pull-out shelf locating catch

38
Optional for: ▸ Quadro V6 5D ▸ Quadro V6 YOU
-
▸ On runner and on pull-out shelf

Runner systems for wooden drawers

- **Quadro V6 5D full extension runner, slide on installation (drawer side profile thickness ≤ 16 mm)**
- **Load classes XS (10 kg) / M (30 kg)**



- **Slide on installation** with 2D catches for height and side adjustment, integrated depth adjustment, integrated tilt adjustment, integrated radial adjustment
- Various **user friendly functions** (see ordering table)
- 2D catch must be ordered separately
- Adjustments all tool-lees: height adjustment up to + 3 mm, side adjustment up to +/- 1.5 mm, depth adjustment up to + 2/- 1 mm, tilt adjustment up to + 4 mm and radial adjustment up to +/- 1.5 mm
- Optional: Push to open Silent opening system (upgradable when combined with Silent System)
- Optional: synchronisation / multi synchronisation (upgradable when combined with Push to open / Push to open Silent)
- Optional: pull-out shelf support / pull-out shelf locating catch
- 10 kg and 30 kg load classes for different applications (see ordering table)
- Platform concept: identical cabinet body, drawer and front panel dimension for Quadro partial and full extension runners for slide on installation
- Suitable for drawers with a side profile thickness of up to 16 mm
- Load capacity to EN 15338, Level 3
- Galvanised steel

Set packaging

Nominal length mm	Order no. / User friendly features		PU
	Silent System	Push to open	
Load class XS (10 kg)			
250	**9 332 697**		1 pair
270	**9 332 698**		1 pair
300	**9 332 699**		1 pair
320	**9 332 700**		1 pair
350	**9 332 701**		1 pair
Load class M (30 kg)			
250	**9 332 702**	**9 332 717**	1 pair
270	**9 332 703**		1 pair
300	**9 332 704**	**9 332 718**	1 pair
320	**9 332 705**	**9 332 719**	1 pair
350	**9 332 706**	**9 332 720**	1 pair
380	**9 332 707**	**9 332 721**	1 pair
400	**9 332 708**	**9 332 722**	1 pair
420	**9 332 709**	**9 332 723**	1 pair
450	**9 332 710**	**9 332 724**	1 pair
480	**9 332 711**	**9 332 725**	1 pair
500	**9 332 712**	**9 332 726**	1 pair
520	**9 332 713**	**9 332 727**	1 pair
550	**9 332 714**	**9 332 728**	1 pair
580	**9 332 715**	**9 332 729**	1 pair
600	**9 332 716**	**9 332 730**	1 pair

Runner systems for wooden drawers

- **Quadro V6 5D full extension runner, slide on installation (drawer side profile thickness ≤ 16 mm)**
- **Load classes XS (10 kg) / M (30 kg)**

Bulk packaging

Nominal length mm	Order no. / User friendly features				PU
	Silent System		Push to open		
	left	right	left	right	
Load class XS (10 kg)					
250	**9 332 629**	**9 332 630**			10 ea.
270	**9 332 631**	**9 332 632**			10 ea.
300	**9 332 633**	**9 332 634**			10 ea.
320	**9 332 635**	**9 332 636**			10 ea.
350	**9 332 637**	**9 332 638**			10 ea.
Load class M (30 kg)					
250	**9 332 639**	**9 332 640**	**9 332 669**	**9 332 670**	10 ea.
270	**9 332 641**	**9 332 642**			10 ea.
300	**9 332 643**	**9 332 644**	**9 332 671**	**9 332 672**	10 ea.
320	**9 332 645**	**9 332 646**	**9 332 673**	**9 332 674**	10 ea.
350	**9 332 647**	**9 332 648**	**9 332 675**	**9 332 676**	10 ea.
380	**9 332 649**	**9 332 650**	**9 332 677**	**9 332 678**	10 ea.
400	**9 332 651**	**9 332 652**	**9 332 679**	**9 332 680**	10 ea.
420	**9 332 653**	**9 332 654**	**9 332 681**	**9 332 682**	10 ea.
450	**9 332 655**	**9 332 656**	**9 332 683**	**9 332 684**	10 ea.
480	**9 332 657**	**9 332 658**	**9 332 685**	**9 332 686**	10 ea.
500	**9 332 659**	**9 332 660**	**9 332 687**	**9 332 688**	10 ea.
520	**9 332 661**	**9 332 662**	**9 332 689**	**9 332 690**	10 ea.
550	**9 332 663**	**9 332 664**	**9 332 691**	**9 332 692**	10 ea.
580	**9 332 665**	**9 332 666**	**9 332 693**	**9 332 694**	10 ea.
600	**9 332 667**	**9 332 668**	**9 332 695**	**9 332 696**	10 ea.

2D catch



- For using Quadro V6 5D and Quadro 25 2D with wooden drawers
- Tool-less height adjustment up to + 3 mm and side adjustment up to +/- 1.5 mm
- Optional: pull-out shelf support
- Plastic anthracite

Article	Order no.	PU
Set of 2D catches, left and right	**9 329 164**	1/5 pair
2D catch, left	**9 329 162**	100 ea.
2D catch, right	**9 329 163**	100 ea.

Advice

- Push to open Silent
- Push to open synchronisation / multi synchronisation
- Accessories
- Quality criteria

hettich.com/short/lic2aq0

- **Quadro V6 5D full extension runner, slide on installation (drawer side profile thickness ≤ 16 mm)**
- **Load classes XS (10 kg) / M (30 kg)**

Front cross section

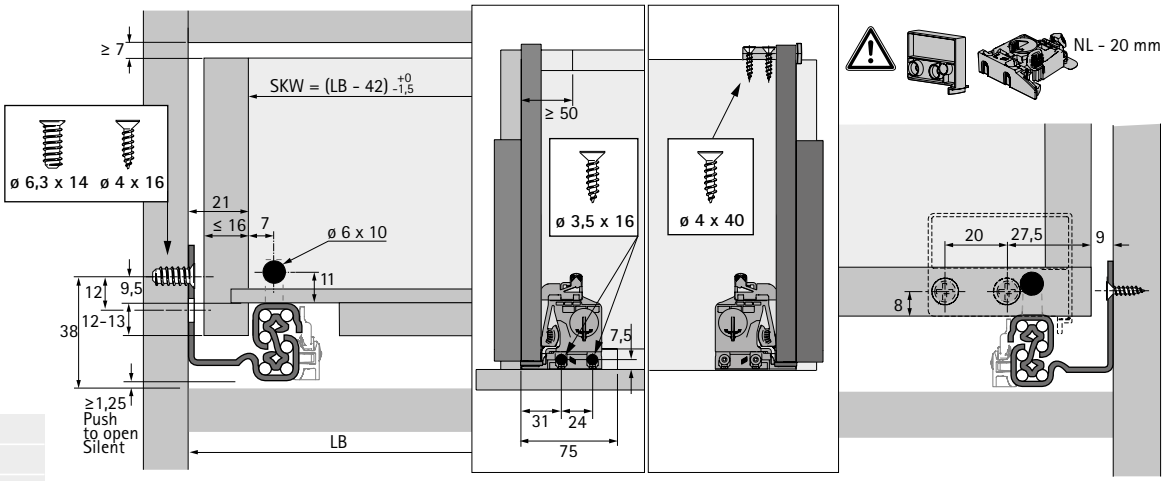

LB Clear inside width
NL Nominal length
SKW Internal drawer width

Side cross section

NL mm	b1 mm
250	160
270	160
300	160
320	224
350	224
380	224
400	224
420	224
450	256
480	256
500	256
520	256
550	256
600	256

NL Nominal length
LT Clear inside depth
SKL Drawer length

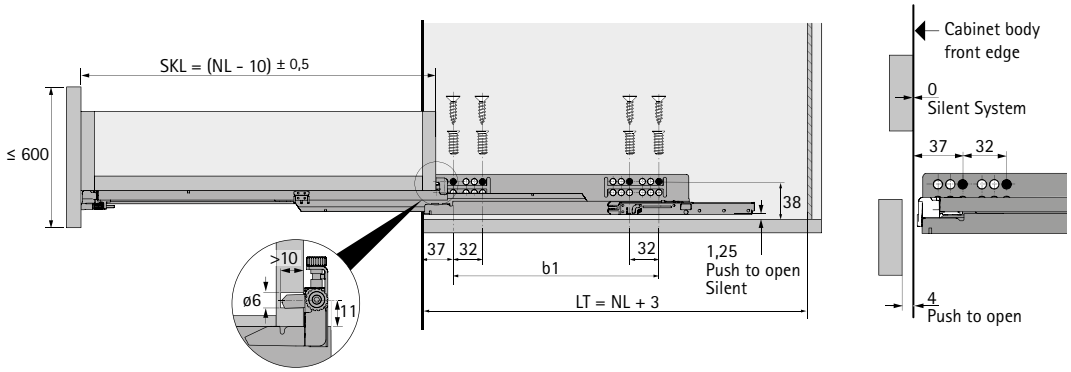

Advice

- Push to open Silent
- Push to open synchronisation / multi synchronisation
- Accessories
- Quality criteria

hettich.com/short/lic2aq0

Runner systems for wooden drawers

- **Quadro V6 YOU full extension runner, slide on installation (drawer side profile thickness ≤ 16 mm)**
- **Load classes XS (10 kg) / M (30 kg)**



- **Slide on installation** with YOU catches for height adjustment
- Various **user friendly functions** (see ordering table)
- YOU catch must be ordered separately
- Tool-less height adjustment up to + 3 mm
- Optional: Push to open Silent opening system (upgradable when combined with Silent System)
- Optional: synchronisation / multi synchronisation (upgradable when combined with Push to open / Push to open Silent)
- Optional: pull-out shelf support / pull-out shelf locating catch
- 10 kg and 30 kg load classes for different applications (see ordering table)
- Platform concept: identical cabinet body, drawer and front panel dimension for Quadro partial and full extension runners for slide on installation
- Suitable for drawers with a side profile thickness of up to 16 mm
- Load capacity to EN 15338, Level 3
- Galvanised steel

Set packaging

Nominal length mm	Order no. / User friendly features		PU
	Silent System	Push to open	
Load class XS (10 kg)			
250	**9 256 952**		1 pair
270	**9 256 953**		1 pair
300	**9 256 954**		1 pair
320	**9 256 955**		1 pair
350	**9 256 956**		1 pair
Load class M (30 kg)			
250	**9 256 882**	**9 256 927**	1 pair
270	**9 256 883**	**9 256 928**	1 pair
300	**9 256 884**	**9 256 929**	1 pair
320	**9 256 885**	**9 256 930**	1 pair
350	**9 256 886**	**9 256 931**	1 pair
380	**9 256 887**	**9 256 932**	1 pair
400	**9 256 888**	**9 256 933**	1 pair
420	**9 256 889**	**9 256 934**	1 pair
450	**9 256 890**	**9 256 935**	1 pair
480	**9 256 891**	**9 256 936**	1 pair
500	**9 256 892**	**9 256 937**	1 pair
520	**9 256 893**	**9 256 938**	1 pair
550	**9 256 894**	**9 256 939**	1 pair
600	**9 256 896**	**9 256 941**	1 pair

Runner systems for wooden drawers

- **Quadro V6 YOU full extension runner, slide on installation (drawer side profile thickness ≤ 16 mm)**
- **Load classes XS (10 kg) / M (30 kg)**

Bulk packaging

Nominal length mm	Order no. / User friendly features				PU
	Silent System		Push to open		
	left	right	left	right	
Load class XS (10 kg)					
250	**9 256 942**	**9 256 943**			20 ea.
270	**9 256 944**	**9 256 945**			20 ea.
300	**9 256 946**	**9 256 947**			20 ea.
320	**9 256 948**	**9 256 949**			20 ea.
350	**9 256 950**	**9 256 951**			20 ea.
Load class M (30 kg)					
250	**9 256 852**	**9 256 853**	**9 256 897**	**9 256 898**	20 ea.
270	**9 256 854**	**9 256 855**	**9 256 899**	**9 256 900**	20 ea.
300	**9 256 856**	**9 256 857**	**9 256 901**	**9 256 902**	20 ea.
320	**9 256 858**	**9 256 859**	**9 256 903**	**9 256 904**	20 ea.
350	**9 256 860**	**9 256 861**	**9 256 905**	**9 256 906**	20 ea.
380	**9 256 862**	**9 256 863**	**9 256 907**	**9 256 908**	20 ea.
400	**9 256 864**	**9 256 865**	**9 256 909**	**9 256 910**	20 ea.
420	**9 256 866**	**9 256 867**	**9 256 911**	**9 256 912**	20 ea.
450	**9 256 868**	**9 256 869**	**9 256 913**	**9 256 914**	20 ea.
480	**9 256 870**	**9 256 871**	**9 256 915**	**9 256 916**	20 ea.
500	**9 256 872**	**9 256 873**	**9 256 917**	**9 256 918**	20 ea.
520	**9 256 874**	**9 256 875**	**9 256 919**	**9 256 920**	20 ea.
550	**9 256 876**	**9 256 877**	**9 256 921**	**9 256 922**	20 ea.
600	**9 256 880**	**9 256 881**	**9 256 925**	**9 256 926**	20 ea.

YOU Catch



- For using Quadro V6 YOU with wooden drawers
- Suitable for pull-out shelf applications, plug must be ordered separately
- Height adjustment up to + 3 mm
- Plastic anthracite

Article	Order no.	PU
Set of YOU catches, left and right	**9 257 262**	1/5 pair
YOU catch, left	**9 257 260**	100 ea.
YOU catch, right	**9 257 261**	100 ea.

Advice

- Push to open Silent
- Push to open synchronisation / multi synchronisation
- Accessories
- Quality criteria

hettich.com/short/cf3fe9

- **Quadro V6 YOU full extension runner, slide on installation (drawer side profile thickness ≤ 16 mm)**
- **Load classes XS (10 kg) / M (30 kg)**

Front cross section

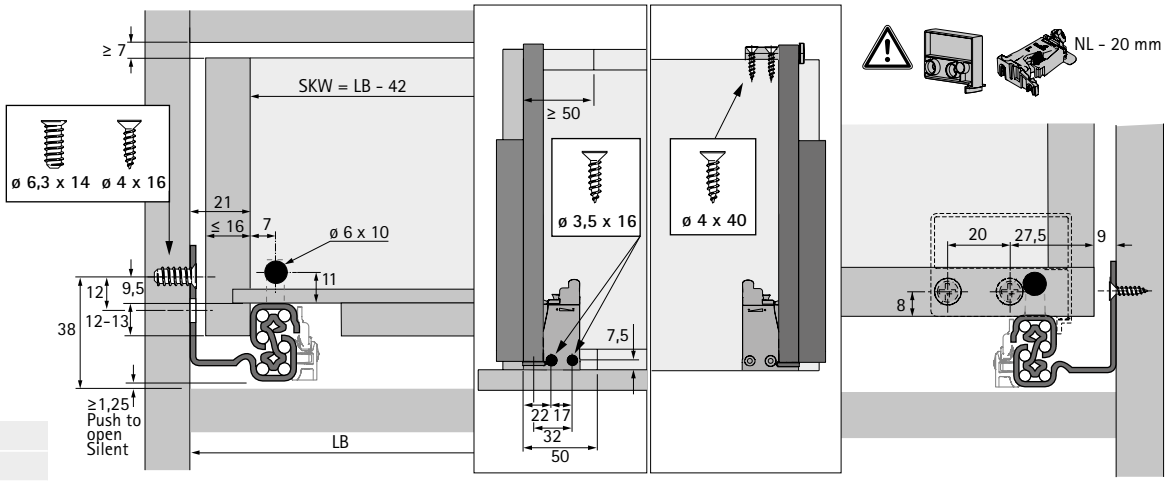

LB Clear inside width
NL Nominal length
SKW Internal drawer width

Side cross section

NL mm	b1 mm
250	160
270	160
300	160
320	224
350	224
380	224
400	224
420	224
450	256
480	256
500	256
520	256
550	256
600	256

NL Nominal length
LT Clear inside depth
SKL Drawer length

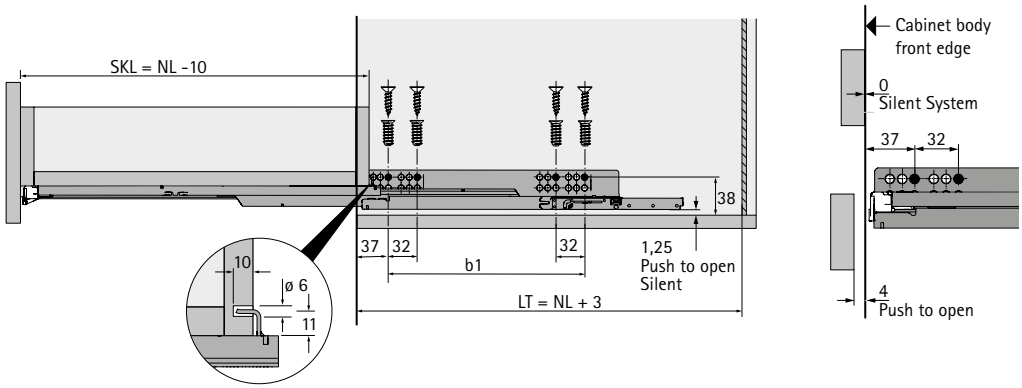

Advice

- Push to open Silent
- Push to open synchronisation / multi synchronisation
- Accessories
- Quality criteria

hettich.com/short/cf3fe9

Runner systems for wooden drawers

- **Quadro 25 2D partial extension runner, slide on installation (drawer side profile thickness ≤ 16 mm)**
- **Load class S (25 kg)**



- **Slide on installation** with 2D catches for tool-less height and side adjustment
- Various **user friendly functions** (see ordering table)
- 2D catch must be ordered separately
- Adjustments all tool-lees: height adjustment up to + 3 mm and side adjustment up to +/- 1.5 mm
- Optional: synchronisation / multi synchronisation (upgradable when combined with Push to open)
- Optional: pull-out shelf support
- Platform concept: identical cabinet body, drawer and front panel dimension for Quadro partial and full extension runners for slide on installation
- Suitable for drawers with a side profile thickness of up to 16 mm
- Load capacity to EN 15338, Level 3
- Galvanised steel

Set packaging

Nominal length mm	Order no. / User friendly features		PU
	Silent System	Push to open	
270	**9 333 188**	**9 333 214**	1 pair
300	**9 333 189**	**9 333 215**	1 pair
320	**9 333 190**	**9 333 216**	1 pair
350	**9 333 191**	**9 333 217**	1 pair
380	**9 333 192**	**9 333 218**	1 pair
400	**9 333 193**	**9 333 219**	1 pair
420	**9 333 194**	**9 333 220**	1 pair
450	**9 333 195**	**9 333 222**	1 pair
480	**9 333 196**	**9 333 223**	1 pair
500	**9 333 197**	**9 333 225**	1 pair
520	**9 333 198**	**9 333 226**	1 pair
550	**9 333 199**	**9 333 227**	1 pair

Bulk packaging

Nominal length mm	Order no. / User friendly features				PU
	Silent System		Push to open		
	left	right	left	right	
270	**9 318 521**	**9 318 522**	**9 319 311**	**9 319 312**	20 ea.
300	**9 318 523**	**9 318 524**	**9 319 314**	**9 319 315**	20 ea.
320	**9 318 525**	**9 318 526**	**9 319 317**	**9 319 318**	20 ea.
350	**9 318 527**	**9 318 528**	**9 319 323**	**9 319 324**	20 ea.
380	**9 318 529**	**9 318 530**	**9 319 327**	**9 319 328**	20 ea.
400	**9 318 531**	**9 318 532**	**9 319 329**	**9 319 330**	20 ea.
420	**9 318 533**	**9 318 534**	**9 319 331**	**9 319 332**	20 ea.
450	**9 318 535**	**9 318 536**	**9 319 333**	**9 319 334**	20 ea.
480	**9 318 537**	**9 318 538**	**9 319 335**	**9 319 336**	20 ea.
500	**9 318 539**	**9 318 540**	**9 319 337**	**9 319 338**	20 ea.
520	**9 318 541**	**9 318 542**	**9 319 339**	**9 319 340**	20 ea.
550	**9 318 543**	**9 318 544**	**9 319 341**	**9 319 342**	20 ea.

Advice

- Push to open synchronisation / multi synchronisation
- Accessories
- Quality criteria

hettich.com/short/sf4xcip

- **Quadro 25 2D partial extension runner, slide on installation (drawer side profile thickness ≤ 16 mm)**
- **Load class S (25 kg)**

2D catch



- For using Quadro V6 5D and Quadro 25 2D with wooden drawers
- Tool-less height adjustment up to + 3 mm and side adjustment up to +/- 1.5 mm
- Optional: pull-out shelf support
- Plastic anthracite

Article	Order no.	PU
Set of 2D catches, left and right	**9 329 164**	1/5 pair
2D catch, left	**9 329 162**	100 ea.
2D catch, right	**9 329 163**	100 ea.

Front cross section

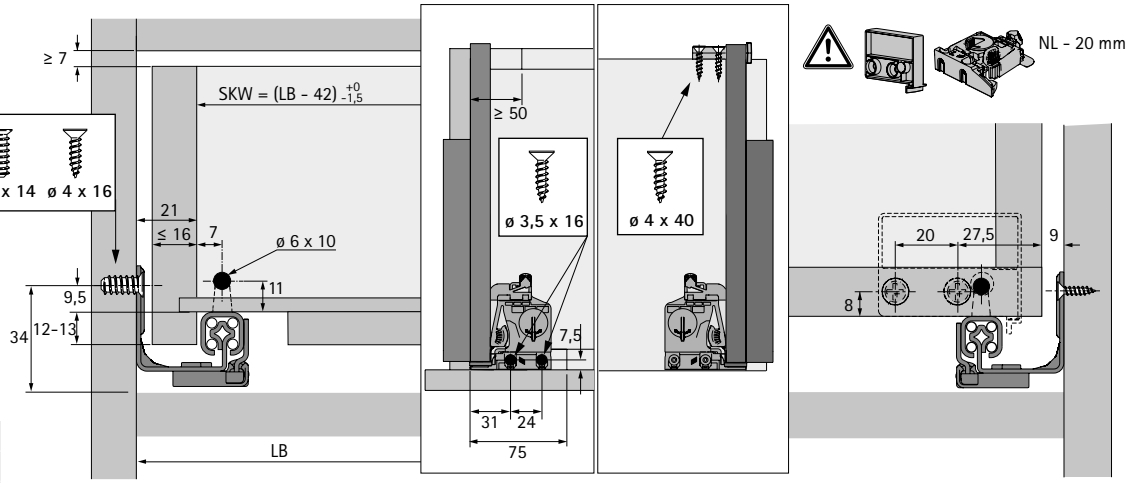

LB	Clear inside width
NL	Nominal length
SKW	Internal drawer width

Side cross section

NL mm	b1 mm	EL mm
270	160	60
300	160	60
320	192	70
350	192	70
380	224	70
400	224	74
420	224	74
450	256	95
480	256	95
500	256	105
520	256	105
550	256	105

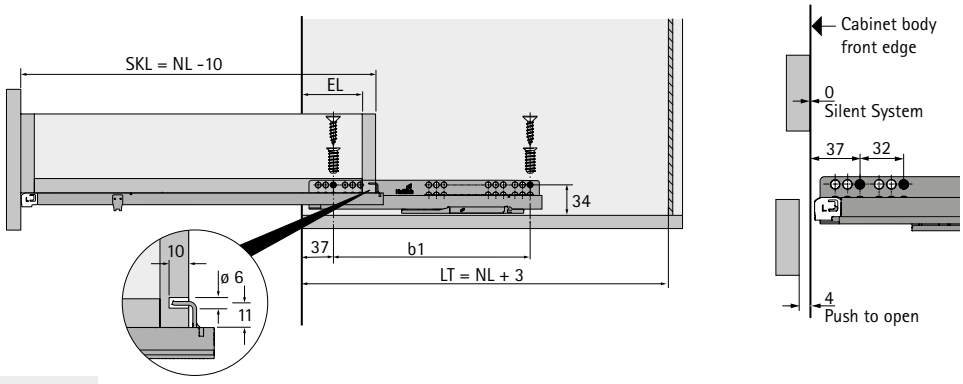

NL	Nominal length
LT	Clear inside depth
SKL	Drawer length
EL	Extension loss

Runner systems for wooden drawers

- **Quadro 25 YOU partial extension runner, slide on installation (drawer side profile thickness ≤ 16 mm)**
- **Load class S (25 kg)**



- **Slide on installation** with YOU catches for height adjustment
- Various **user friendly functions** (see ordering table)
- YOU catch must be ordered separately
- Tool-less height adjustment up to + 3 mm
- Optional: synchronisation / multi synchronisation (upgradable when combined with Push to open user friendly function)
- Optional: pull-out shelf support
- Platform concept: identical cabinet body, drawer and front panel dimension for Quadro partial and full extension runners for slide on installation
- Suitable for drawers with a side profile thickness of up to 16 mm
- Load capacity to EN 15338, Level 3
- Galvanised steel

Set packaging

Nominal length mm	Order no. / User friendly features		PU
	Silent System	Push to open	
270	**9 333 175**	**9 333 201**	1 pair
300	**9 333 176**	**9 333 202**	1 pair
320	**9 333 177**	**9 333 203**	1 pair
350	**9 333 178**	**9 333 204**	1 pair
380	**9 333 179**	**9 333 205**	1 pair
400	**9 333 180**	**9 333 206**	1 pair
420	**9 333 181**	**9 333 207**	1 pair
450	**9 333 182**	**9 333 208**	1 pair
480	**9 333 183**	**9 333 209**	1 pair
500	**9 333 185**	**9 333 210**	1 pair
520	**9 333 186**	**9 333 211**	1 pair
550	**9 333 187**	**9 333 212**	1 pair

Bulk packaging

Nominal length mm	Order no. / User friendly features				PU
	Silent System		Push to open		
	left	right	left	right	
270	**9 318 624**	**9 318 625**	**9 319 412**	**9 319 413**	20 ea.
300	**9 318 626**	**9 318 627**	**9 319 414**	**9 319 415**	20 ea.
320	**9 318 628**	**9 318 629**	**9 319 416**	**9 319 417**	20 ea.
350	**9 318 630**	**9 318 631**	**9 319 418**	**9 319 419**	20 ea.
380	**9 318 632**	**9 318 633**	**9 319 420**	**9 319 421**	20 ea.
400	**9 318 634**	**9 318 635**	**9 319 422**	**9 319 423**	20 ea.
420	**9 318 636**	**9 318 637**	**9 319 425**	**9 319 426**	20 ea.
450	**9 318 638**	**9 318 639**	**9 319 429**	**9 319 430**	20 ea.
480	**9 318 640**	**9 318 641**	**9 319 431**	**9 319 432**	20 ea.
500	**9 318 642**	**9 318 643**	**9 319 433**	**9 319 434**	20 ea.
520	**9 318 644**	**9 318 645**	**9 319 435**	**9 319 436**	20 ea.
550	**9 318 646**	**9 318 647**	**9 319 438**	**9 319 439**	20 ea.

Advice

- Push to open synchronisation / multi synchronisation
- Accessories
- Quality criteria

hettich.com/short/rzd2hsi

- **Quadro 25 YOU partial extension runner, slide on installation (drawer side profile thickness ≤ 16 mm)**
- **Load class S (25 kg)**

YOU Catch



- For using Quadro V6 YOU and Quadro 25 YOU with wooden drawers
- Tool-less height adjustment up to + 3 mm
- Optional: pull-out shelf support
- Plastic anthracite

Article	Order no.	PU
Set of YOU catches, left and right	**9 257 262**	1/5 pair
YOU catch, left	**9 257 260**	100 ea.
YOU catch, right	**9 257 261**	100 ea.

Front cross section

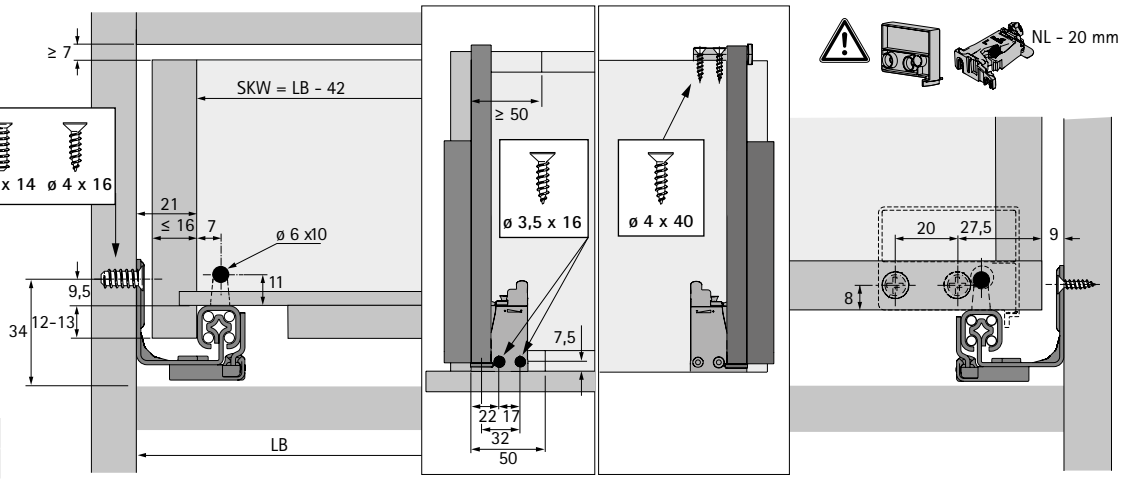

LB	Clear inside width
NL	Nominal length
SKW	Internal drawer width

Side cross section

NL mm	b1 mm	EL mm
270	160	60
300	160	60
320	192	70
350	192	70
380	224	70
400	224	74
420	224	74
450	256	95
480	256	95
500	256	105
520	256	105
550	256	105

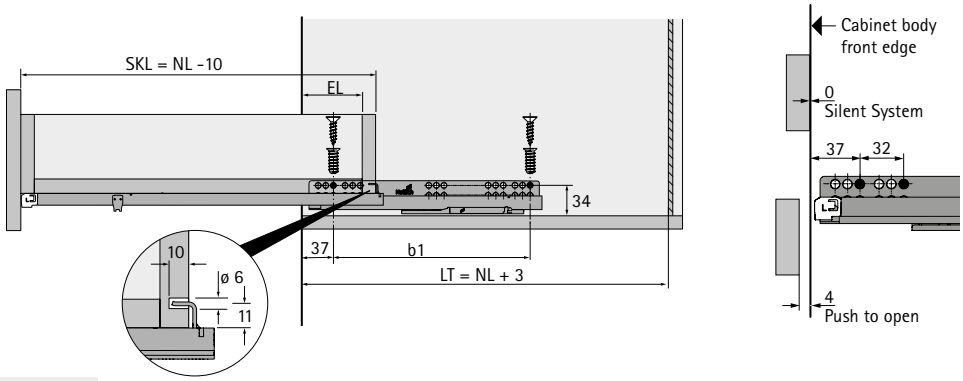

NL	Nominal length
LT	Clear inside depth
SKL	Drawer length
EL	Extension loss

Push to open Silent opening system



- For optimum performance and activation, fitting an optional synchronisation function is recommended

Set comprises:
- 1 Push to open Silent unit, left and right
- 1 activator, left and right
- 2 adapters for synchronisation

Total weight kg	Load class for Quadro	Nominal length mm	**Order no.**	PU
< 10	XS (10 kg)	250 - 350	**9 257 894**	1 set
8 - 20	M (30 kg)	250 - 600	**9 257 895**	1 set
10 - 30	M (30 kg)	350 - 600	**9 257 896**	1 set

Recommendation for drawer (front panel height up to approx. 150 mm, light duty loading)*

Nominal length	Nominal width mm												
mm	275	300	350	400	450	500	550	600	700	800	900	1000	1200
250 - 300													
320 - 350													
380 - 550													
580 - 600													

Recommendation for pot-and-pan drawer (front panel height up to approx. 300 mm, medium duty loading)*

Nominal length	Nominal width mm												
mm	275	300	350	400	450	500	550	600	700	800	900	1000	1200
250 - 300													
320 - 350													
380 - 550													
580 - 600													

Recommendation for pot-and-pan drawer, heavy duty (front panel height up to approx. 300 mm, heavy duty loading, e.g. with stacks of plates)*

Nominal length	Nominal width mm												
mm	275	300	350	400	450	500	550	600	700	800	900	1000	1200
250 - 300													
320 - 350													
380 - 550													
580 - 600													

Order no. Push to open Silent: **9 257 894** **9 257 895** **9 257 896**

* Recommendations for standard applications (front panel 19 mm chipboard, normal household loading), please refer to our online configurator to get more exact recommendations for customer chosen front panel dimensions and materials.

Advice

- Quality criteria

hettich.com/short/6c940e

Optional synchronisation for Push to open Silent

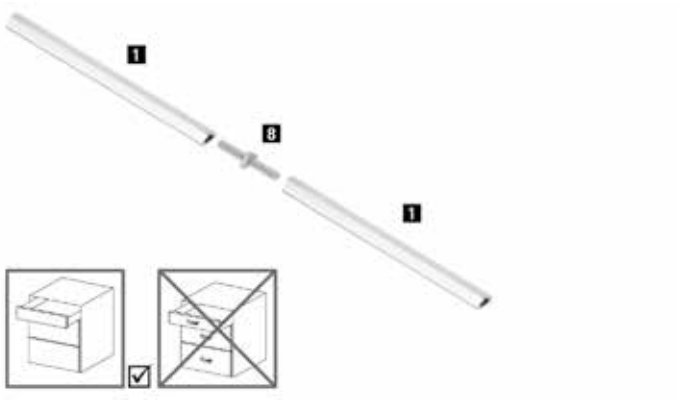

Synchronisation bar:
- For cutting to length, length 1038 mm
- Aluminium, anodised

Connector:
- For extending synchronisation bar / optimising synchronisation bar offcut waste
- Plastic, grey

Article	Order no.	PU
1 Synchronisation bar, 1038mm	**9 236 181**	1/100 ea.
8 Connector	**9 221 295**	1/20 ea.

Optional multi synchronisation for Push to open Silent

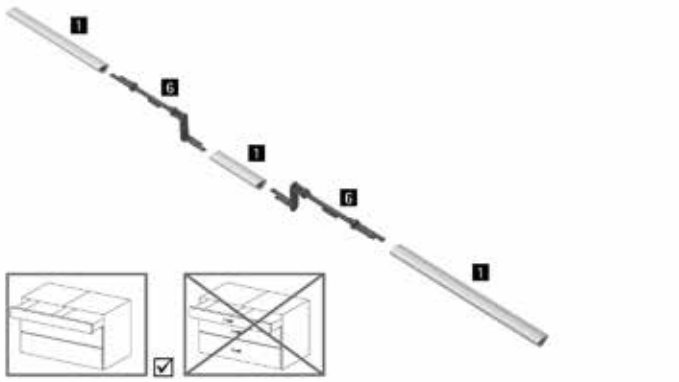

- For two drawers connected by one front panel
- Aluminium, anodised, grey plastic

Article	Order no.	PU
1 Synchronisation bar, 1038mm	**9 236 181**	1/100 ea.
6 Push to open Silent multi synchronisation adapter	**9 278 452**	1/20 ea.

Flexible adapter for Push to open Silent synchronisation

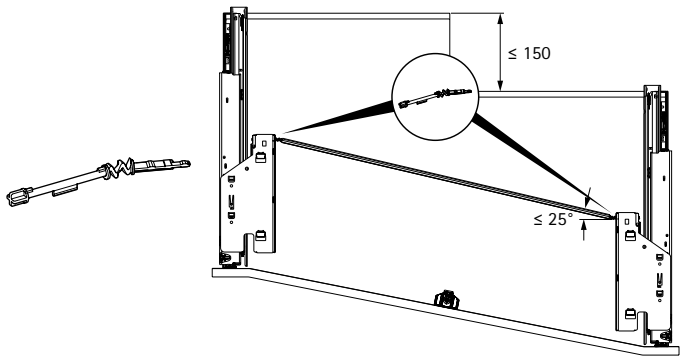

- For offset drawer runners with angled or curved fronts
- Depth offset max. 150 mm
- Angle at synchronisation bar max. 25°
- Replaces the adapter for synchronisation in the Push to open Silent set

Order no.	PU
9 262 213	1/20 ea.

Deflection for Push to open Silent synchronisation

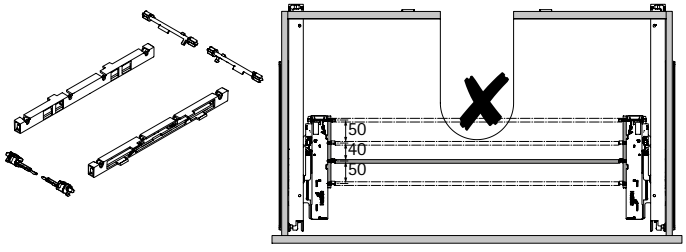

- For use with e.g. U-bend applications
- Makes it possible to move synchronisation by 50, 90 or 140 mm

Set comprises:
- 2 housings with premounted deflection bar
- 2 adapters for Push to open unit
- 2 adapters for synchronisation bar

Order no.	PU
9 278 453	1 set

Synchronisation for Quadro V6 5D / YOU and Quadro 25 2D / YOU with Push to open

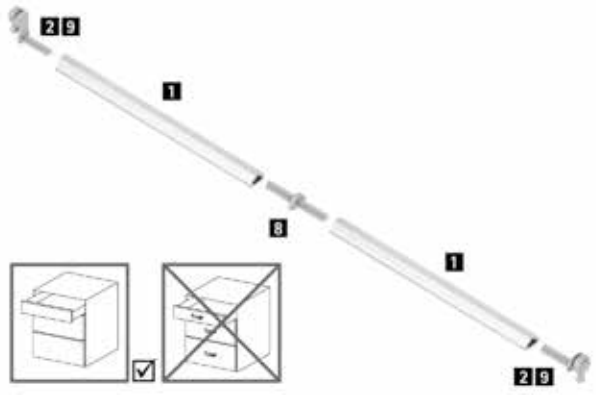

Synchronisation bar:
- For cutting to length, length, 1038 mm
- Aluminium, anodised

Connector:
- For extending synchronisation bar / optimising synchronisation bar offcut waste
- Plastic, grey

Adapter:
- Type A for Quadro V6 5D / YOU
- Type C for Quadro 25 2D / YOU
- Plastic, grey

Article	Order no.	PU
1 Synchronisation bar 1038 mm	**9 236 181**	1/100 ea.
2 Adapter type A	**9 219 966**	1/200 ea.
8 Connector	**9 221 295**	1/20 ea.
9 Adapter type C	**9 254 549**	1/200 ea.

Multi synchronisation for Quadro V6 5D / YOU and Quadro 25 2D / YOU with Push to open

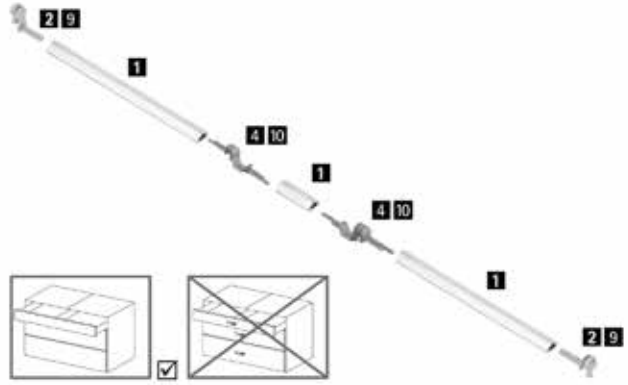

- For two drawers connected by one front panel
- Adapter, type A, for Quadro V6 5D / YOU,
- Adapter, type C, for Quadro 25 2D / YOU
- Aluminium, anodised, grey plastic

Article	Order no.	PU
1 Synchronisation bar	**9 236 181**	1/100 ea.
2 Adapter type A	**9 219 966**	1/200 ea.
4 Adapter, 2 sided, type A	**9 236 526**	1/20 ea.
9 Adapter type C	**9 254 549**	1/200 ea.
10 Adapter 2 sided, type C	**9 327 413**	1/20 ea.

Push to open with optional synchronisation

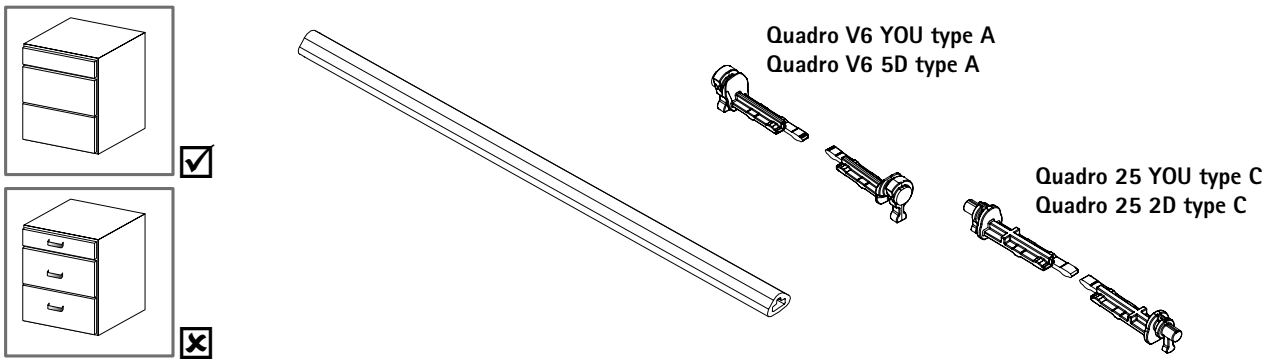

Advice

- Quality criteria

hettich.com/short/c379e1

Cut to length dimensions for synchronisation / multi synchronisation

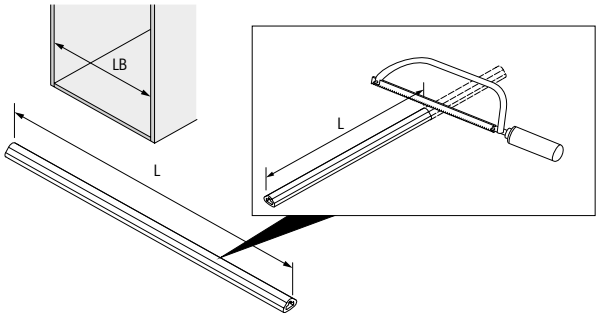

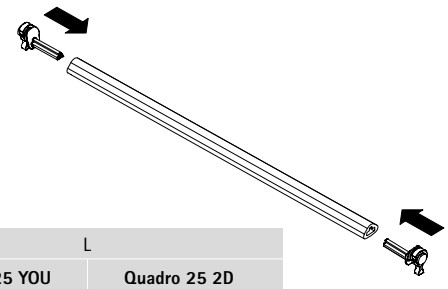

L	
Quadro 25 YOU Quadro V6 YOU	**Quadro 25 2D Quadro V6 5D**
LB - 91	LB - 95

Lengthwise cross section, multi synchronisation

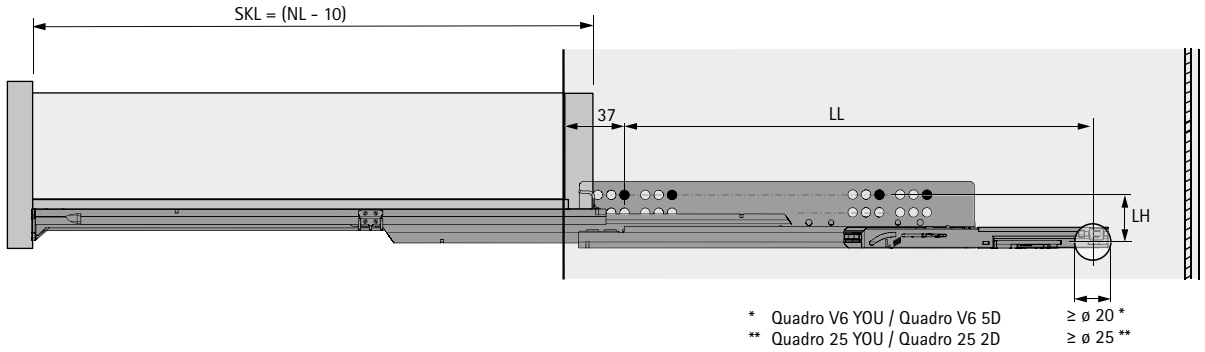

Cut to length dimensions for multi synchronisation

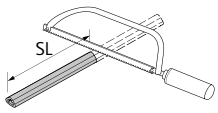

Quadro V6 YOU:
SL = KD + 36

Quadro V6 5D:
SL = KD + 40

Quadro 25 YOU:
SL = KD + 73

Quadro 25 2D:
SL = KD + 77

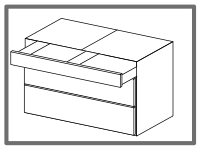

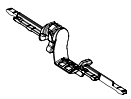

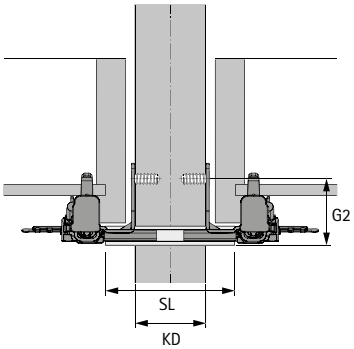

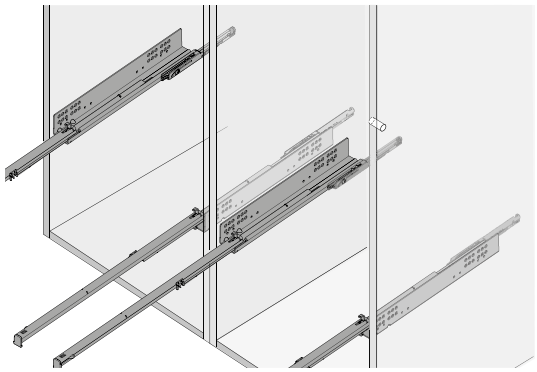

Cut to length dimensions for multi synchronisation

	Quadro V6 YOU / Quadro V6 5D														
NL mm	250	270	300	320	350	380	400	420	450	480	500	520	550	580	600
LL mm	204	204	204	247	247	322	340	346	369	369	394	394	430	437	437

	Quadro 25 YOU / Quadro 25 2D											
NL mm	270	300	320	350	380	400	420	450	480	500	520	550
LL mm	176	176	180	180	180	180	180	180	218	218	218	218

	G2 mm
Quadro V6 YOU	40
Quadro V6 5D	40
Quadro 25 YOU	47
Quadro 25 2D	47

	LH mm
Quadro V6 YOU	33
Quadro V6 5D	33
Quadro 25 YOU	40
Quadro 25 2D	40

Pull-out shelf support



- For pull-out shelves / drawers with flush bottom panel
- Nominal length (NL) is reduced by 20 mm
- Plastic, anthracite

Order no.	PU
9 257 733	1/100 set

Pull-out shelf locating catch, set



- Easy to add locating catch for pull-out shelves
- Automatically engages on pulling shelf out all the way
- Unlocks automatically in response to defined closing force
- Used instead of the standard fitted plug
- 1 mount, left and right, and 2 studs are required per pull-out shelf

Set comprises:
- 1 mount, left and right
- 2 studs

Advice:
- Suitable for Actro YOU, Actro 5D, Quadro YOU, Quadro V6 5D

Colour	Order no.	PU
white	**9 257 725**	1 set
anthracite	**9 257 727**	1 set

Advice

- Quality criteria



Ball bearing runners for side installation
- **Range summary / technical comparison**



Ball bearing runners for overlay installation
- **Range summary / technical comparison**



Assembly aids

Hettich Technical Assistant
- **Installation**
- **Settings**
- **Service**

hettich.com/short/46d098

	KA 4532 Silent System	KA 4532 Push to open	KA 5632
			
Page	42	43	44
Description	Full extension runner	Full extension runner	Full extension runner
User friendly functions	▸ Silent System ▸ Pull-out stop ▸ Roll-out prevention	▸ Push to open ▸ Pull-out stop ▸ Roll-out prevention	▸ Pull-out stop ▸ Roll-out prevention
Installation	▸ Side mounting ▸ Rapid separation	▸ Side mounting ▸ Rapid separation	▸ Side mounting ▸ Rapid separation
Load class	35 kg	35 kg	45 kg
Drawer lengths	300 - 700 mm	300 - 700 mm	250 - 650 mm
Dimensions (H x W)	46 x 12,7 mm	46 x 12,7 mm	46 x 12,7 mm
Finish	galvanised, blue passivated	galvanised, blue passivated	galvanised, blue passivated

KA 4532 AM Silent System	KA 4532 AM Push to open
	
45	46
Full extension runner	Full extension runner
▸ Silent System ▸ Pull-out stop ▸ Roll-out prevention	▸ Push to open ▸ Pull-out stop ▸ Roll-out prevention
▸ Overlay installation ▸ Rapid separation	▸ Overlay installation ▸ Rapid separation
35 kg	35 kg
300 - 700 mm	300 - 700 mm
46 x 12,7 mm	46 x 12,7 mm
galvanised, blue passivated	galvanised, blue passivated

Runner systems for wooden drawers

- **KA 4532 full extension runner with Silent System**
- **Mounted on side, load class 35 kg**





- Full extension runner with integrated **Silent System**
- Release catch for quickly separating drawer from cabinet body
- Precision control for moving smoothly and freely and high lateral stability
- For drawers with grooved, rebated or flush fitted drawer bottom panel
- Load capacity to EN 15338, Level 2
- Galvanised steel, blue passivated
- For a nominal length of 300, drawer travel is just 290 mm

KA 4532 Silent System ball bearing runner, dimensions (H x W) 46 x 12.7 mm

Drawer length SL mm	Minimum cabinet body depth KT mm	Hole spacing b1 mm	Hole spacing b2 mm	Hole spacing b3 mm	Hole spacing C mm	**Order no.**	PU
300	304				171	**9 114 271**	10 pair
350	354	64			220	**9 114 273**	10 pair
400	404	64			254	**9 114 274**	10 pair
450	454	96			294	**9 114 275**	10 pair
500	504	96	64		344	**9 114 276**	10 pair
550	554	96	128		394	**9 114 277**	10 pair
600	604	96	160		444	**9 114 278**	10 pair
650	654	96	128	96	494	**9 114 279**	10 pair
700	704	96	128	128	544	**9 114 280**	10 pair

Planning dimensions

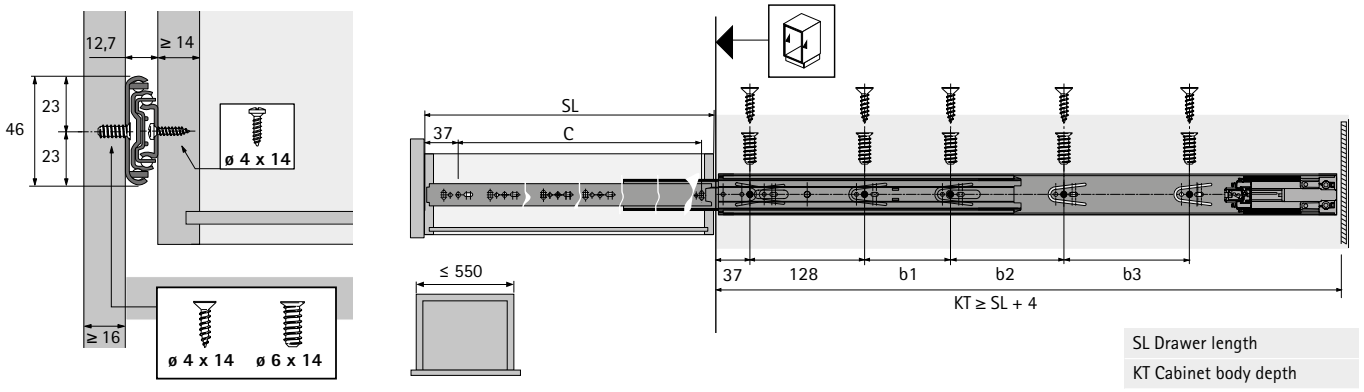

Advice

- Quality criteria
- Accessories

hettich.com/short/66fab5

Runner systems for wooden drawers

- **Full extension runner KA 4532 with Push to open**
- **Mounted on side, load class 35 kg**





- Full extension runner with integrated **Push to open** opening mechanism
- Release catch for quickly separating drawer from cabinet body
- Precision control for moving smoothly and freely and high lateral stability
- For drawers with grooved, rebated or flush fitted drawer bottom panel
- Load capacity to EN 15338, Level 2
- Galvanised steel, blue passivated
- For a nominal length of 300, drawer travel is just 293 mm

KA 4532 Push to open ball bearing runner, dimensions (H x W) 46 x 12.7 mm

Drawer length SL mm	Minimum cabinet body depth KT mm	Hole spacing b1 mm	Hole spacing b2 mm	Hole spacing b3 mm	Hole spacing C mm	**Order no.**	PU
300	304				192	**9 114 281**	10 pair
350	354	64			242	**9 114 282**	10 pair
400	404	96			292	**9 114 283**	10 pair
450	454	160			342	**9 114 284**	10 pair
500	504	96	96		392	**9 114 285**	10 pair
550	554	96	128		442	**9 114 286**	10 pair
600	604	96	128	96	492	**9 114 288**	10 pair
650	654	96	128	128	542	**9 114 289**	10 pair
700	704	96	128	192	592	**9 114 290**	10 pair

Planning dimensions

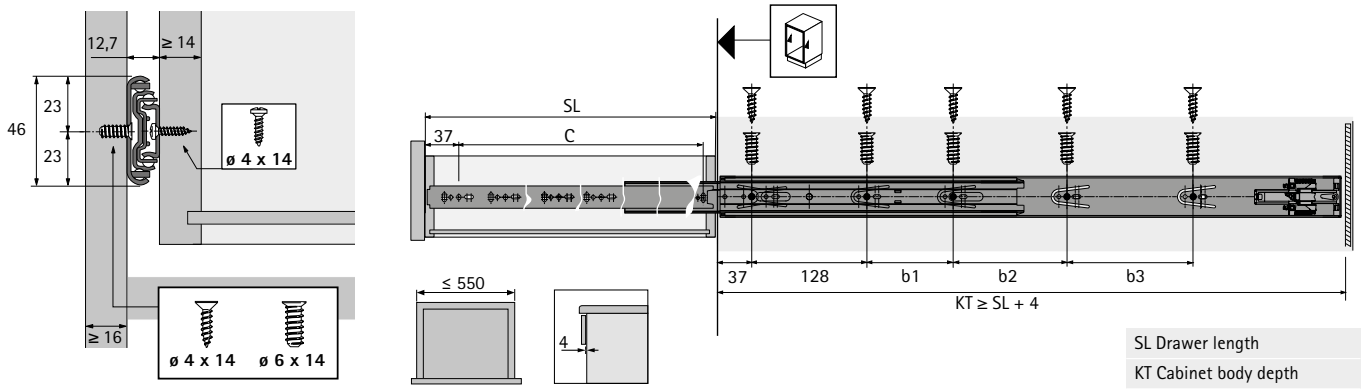

Advice

- Quality criteria
- Accessories

hettich.com/short/e62188

Runner systems for wooden drawers

- **Full extension runner KA 5632**
- **Mounted on side, load class 45 kg**





- Full extension runner with pull-out stop and roll-out prevention
- Release catch for quickly separating drawer from cabinet body
- Precision control for moving smoothly and freely and high lateral stability
- For drawers with grooved, rebated or loosely fitted drawer bottom panel
- Load capacity to EN 15338, Level 2
- Galvanised steel, blue passivated

KA 5632, profile, 46 mm x 12.7 mm (H x W)

Drawer length SL mm	Minimum cabinet body depth KT mm	Hole spacing b1 mm	Hole spacing b2 mm	Hole spacing b3 mm	Hole spacing b4 mm	Hole spacing b5 mm	Hole spacing C mm	**Order no.**	PU
250	254						192	**0 073 276**	1 pair
300	304	96					242	**0 073 277**	1 pair
350	354	96					292	**0 073 278**	1 pair
400	404	96	96				342	**0 073 279**	1 pair
450	454	96	128				392	**0 073 280**	1 pair
500	504	96	128	64			442	**0 073 281**	1 pair
550	554	96	128	64	32	32	492	**0 073 282**	1 pair
600	604	96	128	96	32	32	542	**0 073 283**	1 pair
650	654	96	128	160	32	32	592	**0 073 284**	1 pair

Planning dimensions

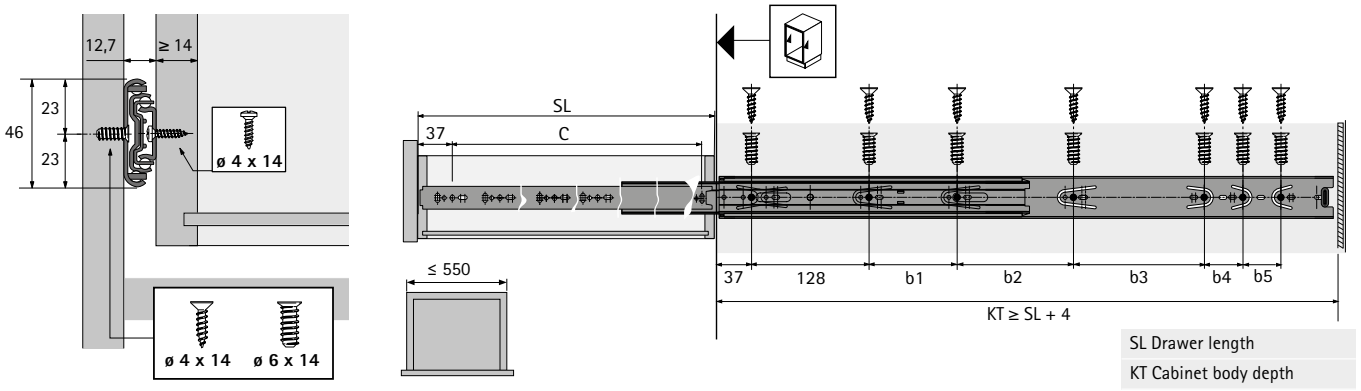

Advice

- Quality criteria 801
- Accessories 798 - 800

hettich.com/short/28f52a

Runner systems for wooden drawers

- **KA 4532 AM full extension runner with Silent System**
- **Overlay installation, load class 35 kg**





- Full extension runner with integrated **Silent System**
- Release catch for quickly separating drawer from cabinet body
- Precision control for moving smoothly and freely and high lateral stability
- For wooden drawers and pull-out shelves
- Load capacity to EN 15338, Level 2
- Galvanised steel, blue passivated
- For a nominal length of 300, drawer travel is just 290 mm

KA 4532 AM Silent System ball bearing runner, dimensions (H x W) 46 x 12.7 mm

Drawer length SL mm	Minimum cabinet body depth KT mm	Hole spacing b1 mm	Hole spacing b2 mm	Hole spacing b3 mm	Hole spacing C mm	**Order no.**	PU
300	304				230	**9 114 548**	10 pair
350	354	64			280	**9 114 553**	10 pair
400	404	64			315	**9 114 554**	10 pair
450	454	96			365	**9 114 555**	10 pair
500	504	96	64		415	**9 114 557**	10 pair
550	554	96	128		465	**9 114 558**	10 pair
600	604	96	160		515	**9 114 559**	10 pair
650	654	96	128	96	565	**9 114 560**	10 pair
690	694	96	128	128	615	**9 114 561**	10 pair

Planning dimensions

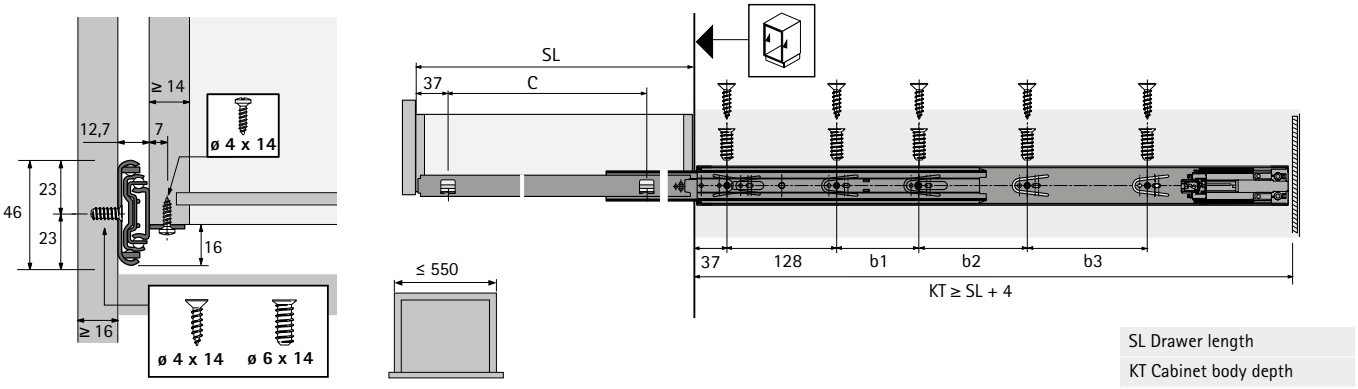

Advice

- Quality criteria
- Accessories

hettich.com/short/3b986b

Runner systems for wooden drawers

- **KA 4532 AM full extension runner with Push to open**
- **Overlay installation, load class 35 kg**





- Full extension runner with integrated **Push to open** opening mechanism
- Release catch for quickly separating drawer from cabinet body
- Precision control for moving smoothly and freely and high lateral stability
- For wooden drawers and pull-out shelves
- Load capacity to EN 15338, Level 2
- Galvanised steel, blue passivated
- For a nominal length of 300, drawer travel is just 293 mm

KA 4532 AM Push to open ball bearing runner, dimensions (H x W) 46 x 12.7 mm

Drawer length SL mm	Minimum cabinet body depth KT mm	Hole spacing b1 mm	Hole spacing b2 mm	Hole spacing b3 mm	Hole spacing C mm	**Order no.**	PU
300	304				192	**9 114 562**	10 pair
350	354	64			242	**9 114 580**	10 pair
400	404	96			292	**9 114 581**	10 pair
450	454	160			342	**9 114 582**	10 pair
500	504	96	96		392	**9 114 583**	10 pair
550	554	96	128		442	**9 114 584**	10 pair
600	604	96	128	96	492	**9 114 585**	10 pair
650	654	96	128	128	542	**9 114 586**	10 pair
700	704	96	128	192	592	**9 114 587**	10 pair

Planning dimensions

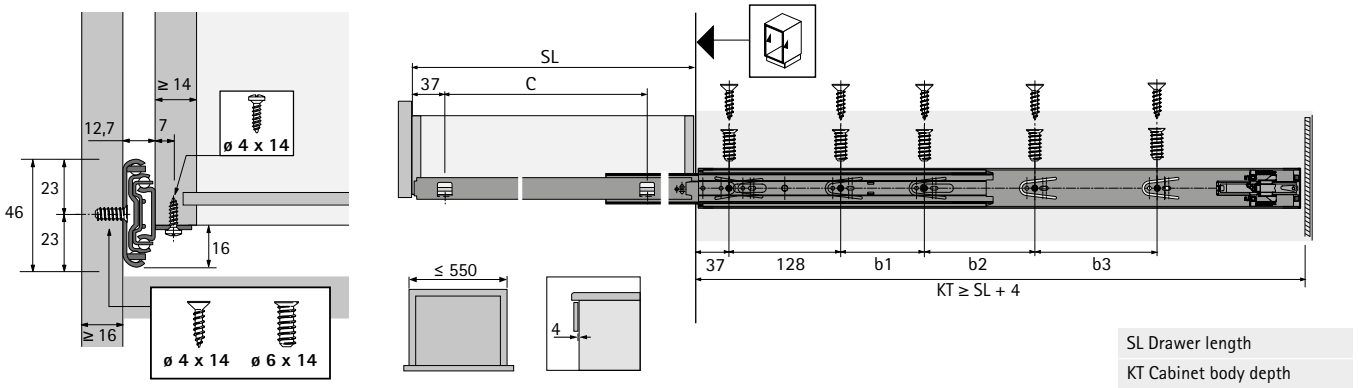

Advice

- Quality criteria
- Accessories

hettich.com/short/0b6ffd

KA 4532

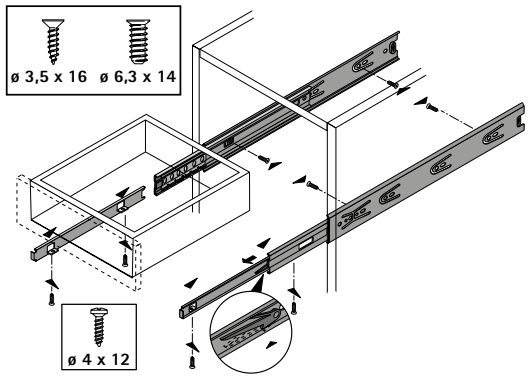

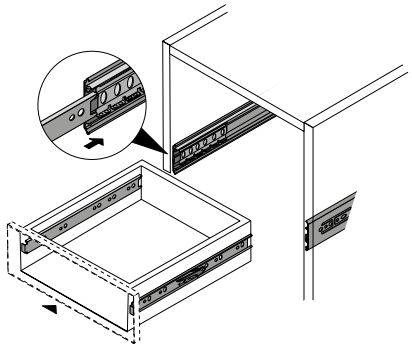

KA 5632

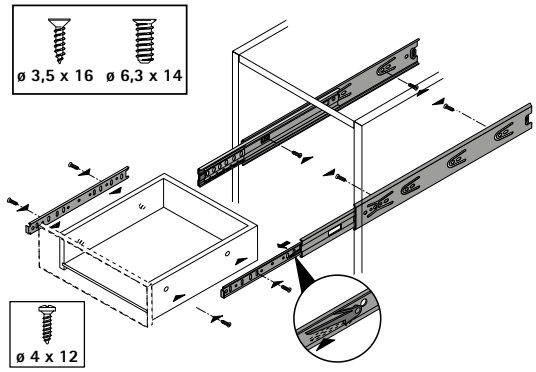

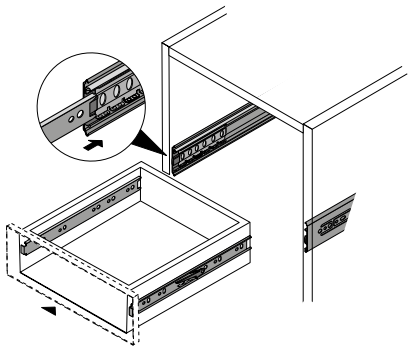

KA 4532 AM

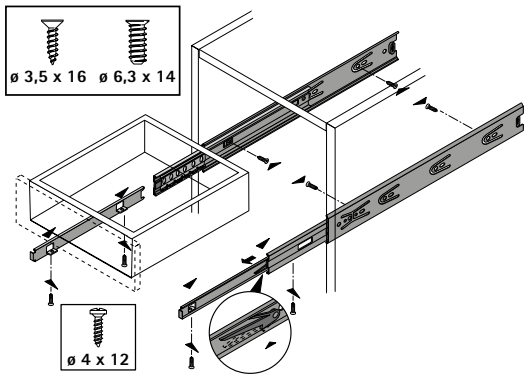

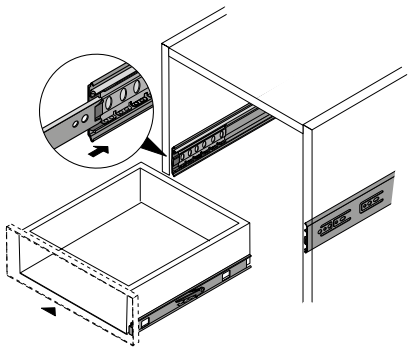

Direct fixing screw



- Countersunk head
- Pozidrive screw

Dimensions mm	Finish	Order no.	PU
ø 6 x 14	nickel plated	**9 137 114**	200 ea.
ø 6.3 x 10.5	galvanised	**0 051 264**	200 ea.
ø 6.3 x 14	galvanised	**0 051 265**	200 ea.

Chipboard screw / countersunk head



- Countersunk head
- Pozidrive screw

Dimensions mm	Finish	Order no.	PU
ø 3.5 x 12	galvanised	**0 058 244**	200 ea.
ø 3.5 x 16	nickel plated	**0 071 925**	200 ea.
ø 3.5 x 20	nickel plated	**0 071 924**	1/200 ea.
ø 4 x 16	nickel plated	**0 010 085**	200 ea.

Door damper for pressing in



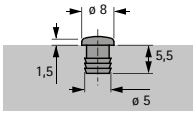

- For drilling ø 5 mm x 5.5 mm
- Transparent plastic

Order no.	PU
9 079 298	1/1000 ea.

Door damper for pressing in



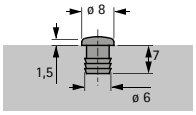

- For drilling ø 6 mm x 7 mm
- Plastic

Colour	Order no.	PU
brown	**0 021 154**	1/1000 ea.
white	**0 025 048**	1/1000 ea.
beige	**0 047 353**	1/1000 ea.

Door damper for sticking on



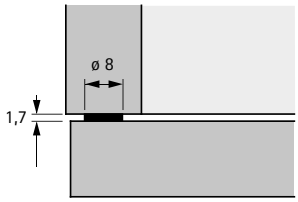

- Self adhesive
- Transparent plastic

Order no.	PU
0 072 120	1/50 ea.
0 046 695	1/1000 ea.

Front panel adjuster



- For 2-dimensional adjustment of fronts on 4-sided drawers
- For knocking into the drawer front panel
- Plastic, white

Order no.	PU
0 071 833	1/200 ea.

Installing front panel adjuster

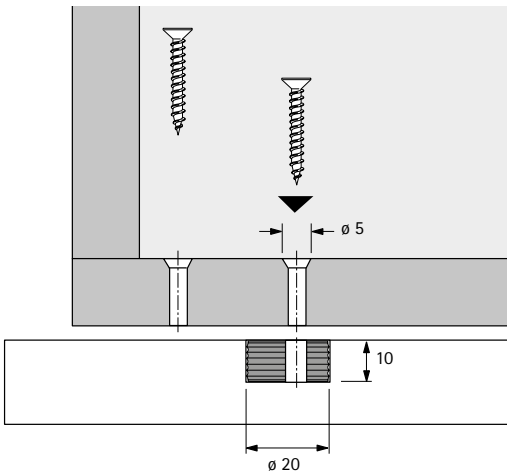

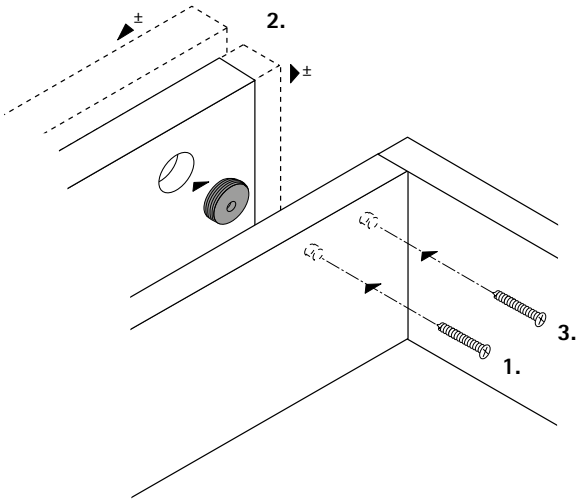

Use ø 4 mm countersunk screws to install the front panel fitting.

Screw length = drawer side profile thickness + 10 mm housing depth

After adjustment, the front panel must be secured by means of one additional chipboard screw

RV 8 rear panel connector



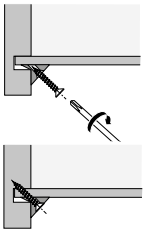

- For fixing drawer bottom panels and rear panels
- Plastic, white
- Screw, ø 3.5 x 20 mm, galvanised steel

Order no.	PU
0 079 438	1/200 ea.

Quality that meets all the demands

The quality of drawer runners is subject to a process of continuous monitoring. Hettich fittings comply with the national and international quality standards of the markets our customers operate in. The diagrams below show some of the tests Hettich fittings are required to pass.

Application
Hettich drawer runners are suitable for use in living room, kitchen, bathroom and office furniture both in the home and business environment.

Load capacity and pull-out guard
The load capacity (to DIN EN 15338) stated in the catalogue is understood to mean the weight of the drawer itself including panel and contents in kg. The applicable level is shown on the product. The load capacity relates to a reference length of 500 mm. The load capacity may vary for other nominal lengths. All Hettich drawer runners feature guards to prevent the drawer from rolling out and being removed unintentionally and meet the requirements of the impact test in a test frame to EN 15338. Used in the intended manner for furniture, these runners are suitable for use in living-room, kitchen and bathroom furniture to EN 14749 and for use in office furniture to EN 16121 and EN 16122. The maximum front panel height depends in particular on the material, drawer size and drawer runner. Testing is conducted on drawers with a 130 mm front panel height and pot-and-pan drawers with a 300 mm front panel height.

Corrosion test
Hettich drawer runners satisfy the requirements on corrosion defined in DIN EN 15338, 72-hour condensation water test to DIN EN 6270.

Wear test

The fully laden drawer must remain in proper working order after opening and closing it for a defined number of times at a defined test velocity.

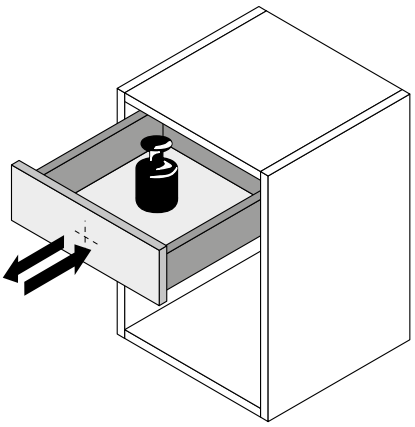

Retention-on-opening test

The fully laden drawer is abruptly opened all the way several times at a defined test velocity.

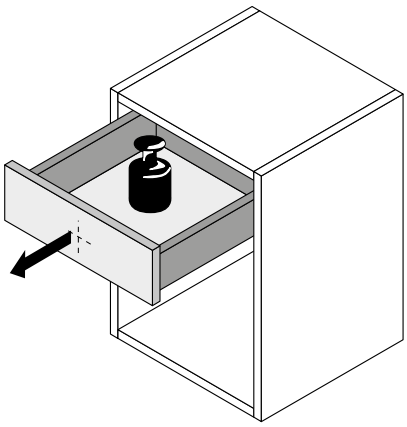

Horizontal load test

Opened all the way, the fully laden drawer is additionally exposed to horizontal strain from a defined lateral force.

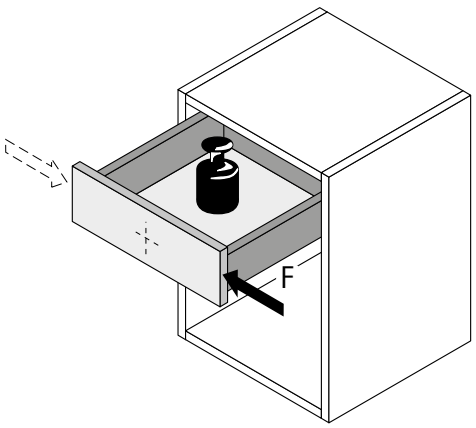

Vertical strain test

Opened all the way, the drawer is additionally exposed to vertical strain from a defined eccentric force.

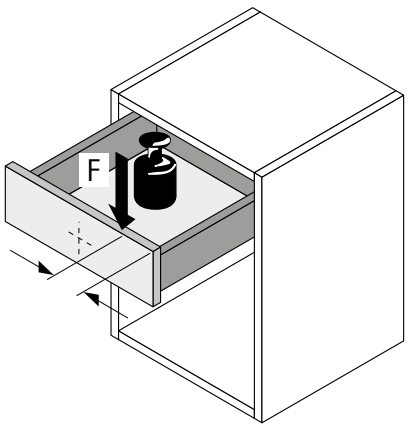



Space efficiency in high rise form

High rise pedestals are becoming increasingly popular. They provide plenty of storage space and can be organised in any way. Hettich offers the perfect fitting system for the innovative furniture concept. Catering exactly to your needs, there are two concealed drawer runners to choose from with different load capacities: Quadro Compact or Quadro Big Duplex.

Tried and proven in millions of applications, the ball bearing principle gives both versions perfect, smooth running action, high stability and strength in everyday office use. Easy installation, high lateral stability and Silent System (optional) are nothing short of impressive.



Everything in its place:
Pencil tray for utensils in the Big Org@Tower Wood.



In easy reach:
The file shelf directly at the workstation.



For mini meetings:
Pull-out seating.

hettich.com/short/f79d08

Find out more:
You can get inspiration and further product details on our website.



Quadro Compact drawer runner



Quadro Big Duplex drawer runner



System components



Design examples
- **Quadro Compact**
- **Quadro Big Duplex**



Quality criteria

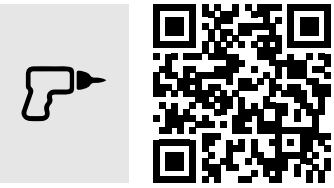

Hettich Technical Assistant
- **Installation**
- **Adjusting**
- **Service**

hettich.com/short/983e15

Quadro Compact drawer runner



- For use in Big Org@Tower Wood
- Full extension runner with Silent System
- 45 kg load capacity to EN 15338, Level 2
- Using 2 fixed castors increases load capacity to 75 kg
- Galvanised steel

Recommended screws:
- 14 ø 6.0 x 14 mm per pair GN

Quadro Compact drawer runner (pair)

Min. installed depth mm	Extension length mm	External dimensions, inner cabinet body, mm	**Order no.**	PU
760	701.5	709	**9 200 438**	1 pair

Planning dimensions: front view of Quadro Compact

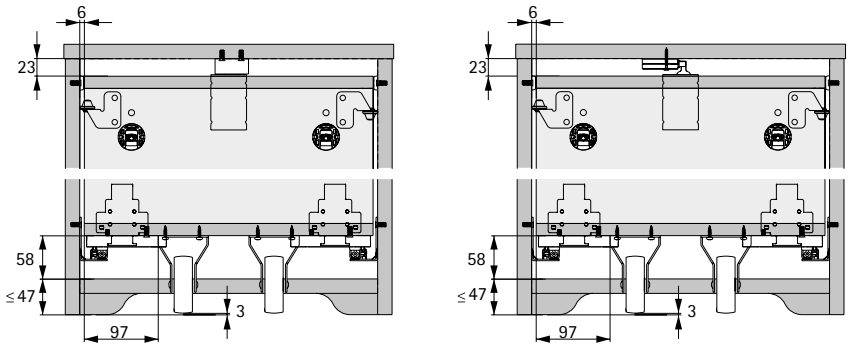

Planning dimensions: side view of Quadro Compact

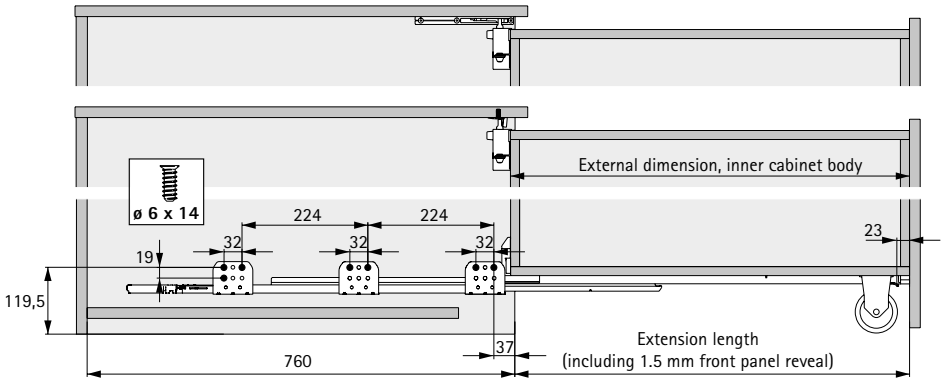

hettich.com/short/200b16

Quadro Big Duplex drawer runner



- For use in Big Org@Tower Wood
- Full extension runner with Silent System
- 80 kg load capacity to EN 15338, Level 2
- Using 2 fixed castors increases load capacity to 130 kg
- Galvanised steel

Recommended screws:
- 14 ø 6.0 x 14 mm per pair GN

Quadro Big Duplex drawer runner (pair)

Min. installed depth mm	Extension length mm	External dimensions, inner cabinet body, mm	**Order no.**	PU
760	701.5	709	**9 200 382**	1 pair
860	801.5	809	**9 200 383**	1 pair

Planning dimensions: front view of Quadro Big Duplex

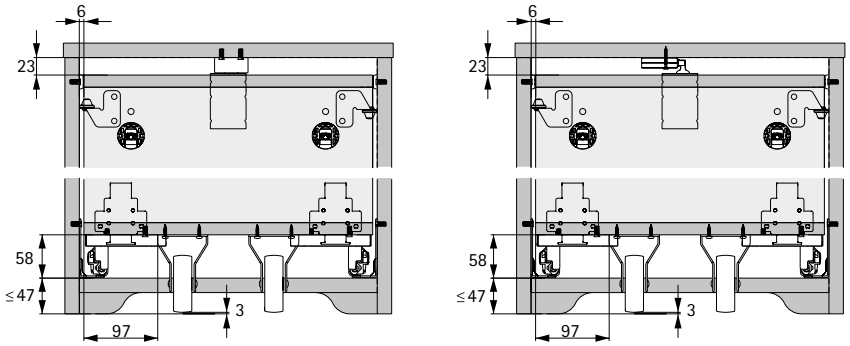

Planning dimensions: side view of Quadro Big Duplex

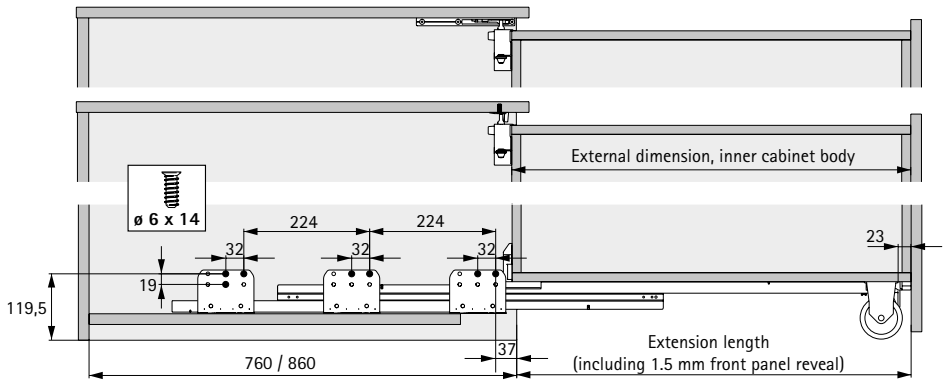

hettich.com/short/8131fc

Planning summary

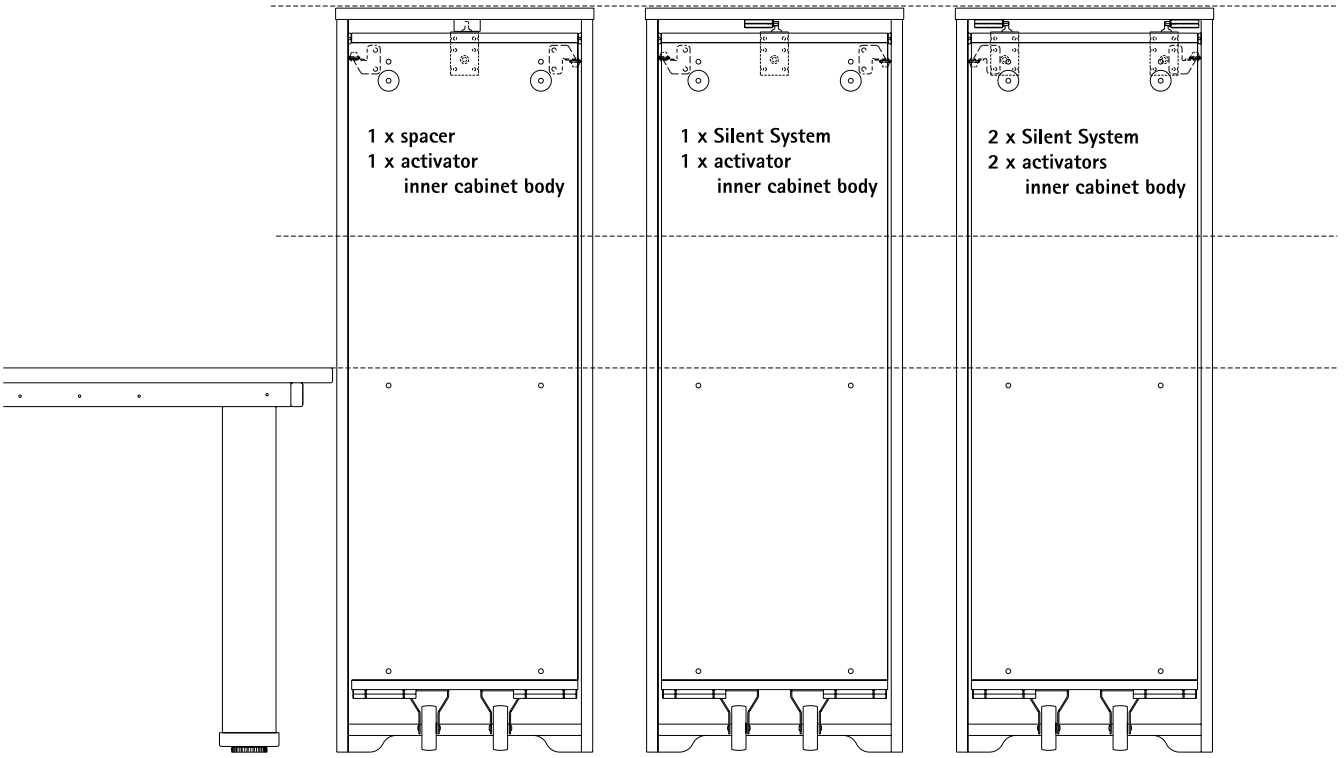

Load capacity per pair	Cabinet body dimensions
45 kg Quadro Compact 75 kg Quadro Compact with fixed castors	min. installed width: 230 mm min. installed depth: 560 mm
80 kg Quadro Big Duplex 130 kg Quadro Big Duplex with fixed castors	

Planning summary

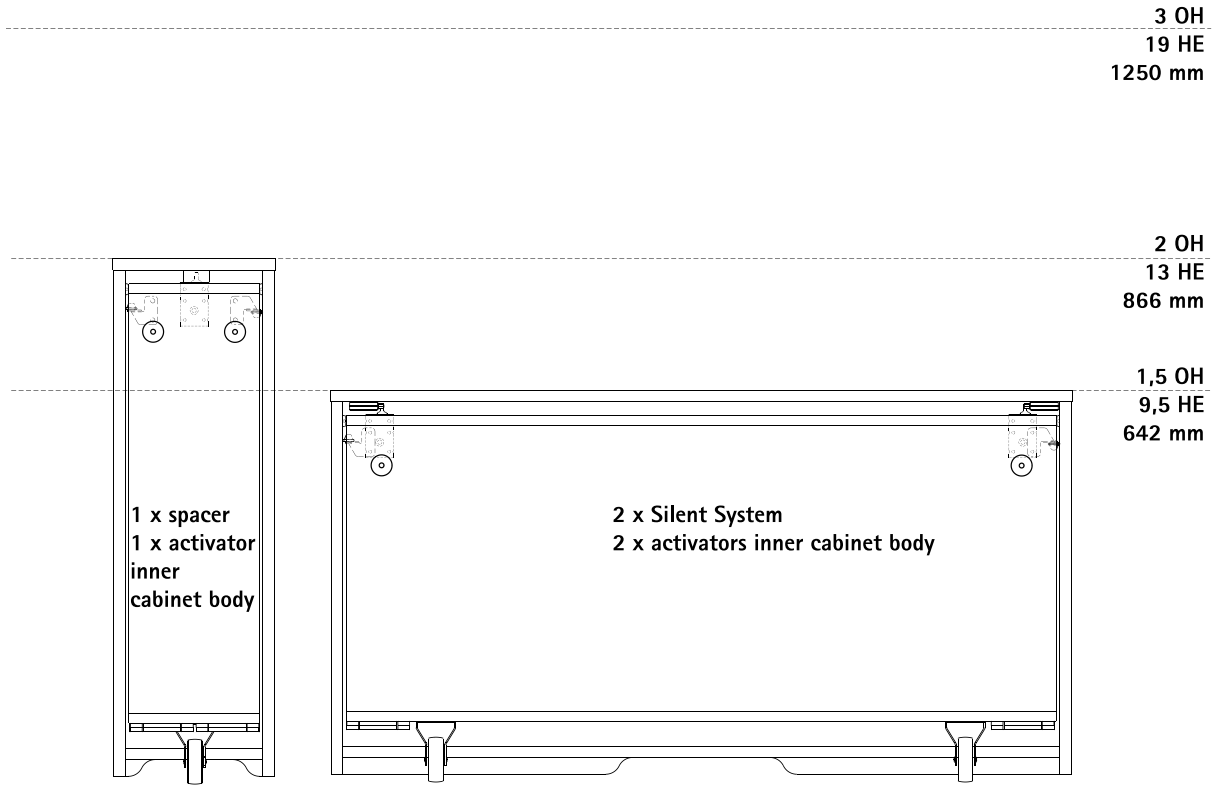

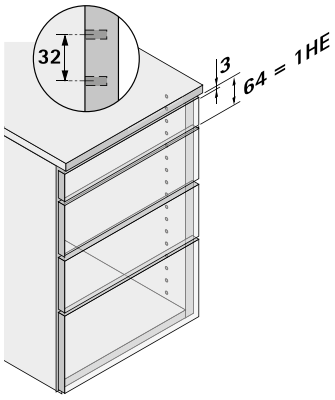

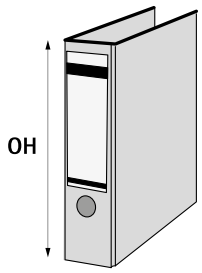

1 HE = 64 mm = 2 x 32 mm

Set, slide on installation runner



- For tool-less attachment of drawer runner and inner cabinet body

Set comprises:
- 2 adapters for catches at front
- 2 adapters for catches at side
- 2 catches, left / right
- 2 length compensators

Important advice:
- For screws, see installation instructions

Order no.	PU
9 200 439	1 set

Set for positioning



- For stabilising the sides
- For adjusting front panel horizontally and vertically

Set comprises:
- 2 side stabilisers
- 2 spacer rollers
- 2 SAH 302

Important advice:
- For screws, see installation instructions

Order no.	PU
9 200 450	1 set

Additional opening limiter set



- For limiting drawer travel

Set comprises:
- 1 spacer
- 1 activator, inner cabinet body

Important advice:
- The activator is attached to the inside of the cabinet body by means of connecting sleeves and additional fixing screws, see installation instructions

Page reference:
- For direct fixing screw, ø 6 x 14 mm, see page 60

Order no.	PU
9 200 451	1 set

Additional Silent System set



- For additional Silent System opening action on the inner cabinet body

Set comprises:
- 1 Silent System housing
- 1 activator, inner cabinet body

Important advice:
- The activator is attached to the inside of the cabinet body by means of connecting sleeves and additional fixing screws, see installation instructions

Order no.	PU
9 203 537	1 set

Apparatus fixed castor



- Housing: galvanised sheet steel
- Wheel axle riveted
- Castor wheel: thermoplastic rubber for hard floors
- Plain bearing

Diameter mm	Installed height mm	Fixing dimensions mm	Load capacity kg	Order no.	PU
75	102	60 x 66	50	**0 028 186**	1/10 ea.

Height adjustable castor (fixed castor)



- For infinitely adjusting to achieve various foot heights
- Housing: plastic
- Wheel axle: cylindrrical pin, engaged
- Castor wheel: thermoplastic rubber for hard floors
- Plain bearing

Important advice:
- Alternatively, fixed castor for apparatus can be used (not adjustable)

Diameter mm	Installed height mm	Fixing dimensions mm	Load capacity kg	Order no.	PU
60	102 - 122	64 x 96	45	**9 221 183**	1/40 ea.

hettich.com/short/d763af

Direct fixing screw



- Drilling diameter 5 mm
- Chipboard quality to DIN EN 320
- Rotation moment 1.5 Nm + 0.3 Nm
- with countersunk head
- Steel nickel plated

Dimensions mm	**Order no.**	PU
ø 6 x 14	**9 137 114**	200 ea.
ø 6 x 14	**1 028 128**	1000 ea.

Direct fixing screw



- Drilling diameter 5 mm
- Chipboard quality to DIN EN 320
- Rotation moment 1.5 Nm + 0.3 Nm
- with lens head
- Steel nickel plated

Dimensions mm	**Order no.**	PU
ø 6 x 13.7	**9 137 686**	200 ea.

VB sleeve



- Steel nickel plated

Length mm	**Order no.**	PU
35	**1 072 393**	1/1000 ea.

Fixing screw



- Galvanised steel

Thread size	Length mm	**Order no.**	PU
M4	24	**0 071 555**	50 ea.

hettich.com/short/8077f6

Planning dimensions, drawing scale 1:1

Height division

19 HE

Quadro Big Duplex drawer runner, full extension runner
Slide on installation runner set
Set for positioning
Additional set with Silent System

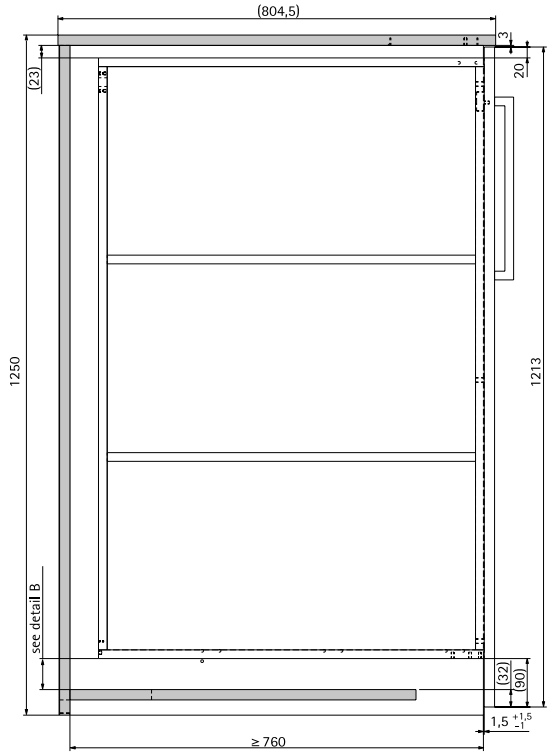

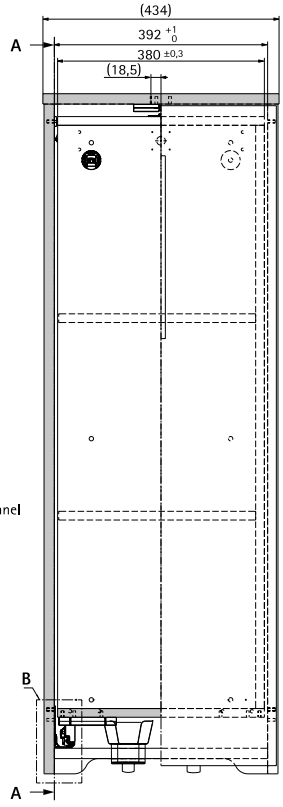

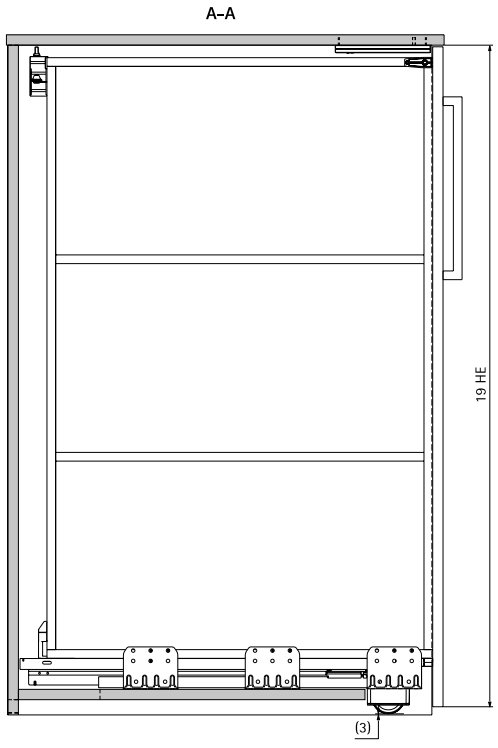

B

Comment:
The Quadro Big Duplex requires a gap of at least 2 mm = space here to the bottom panel

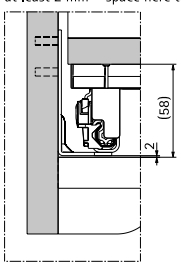

Planning dimensions

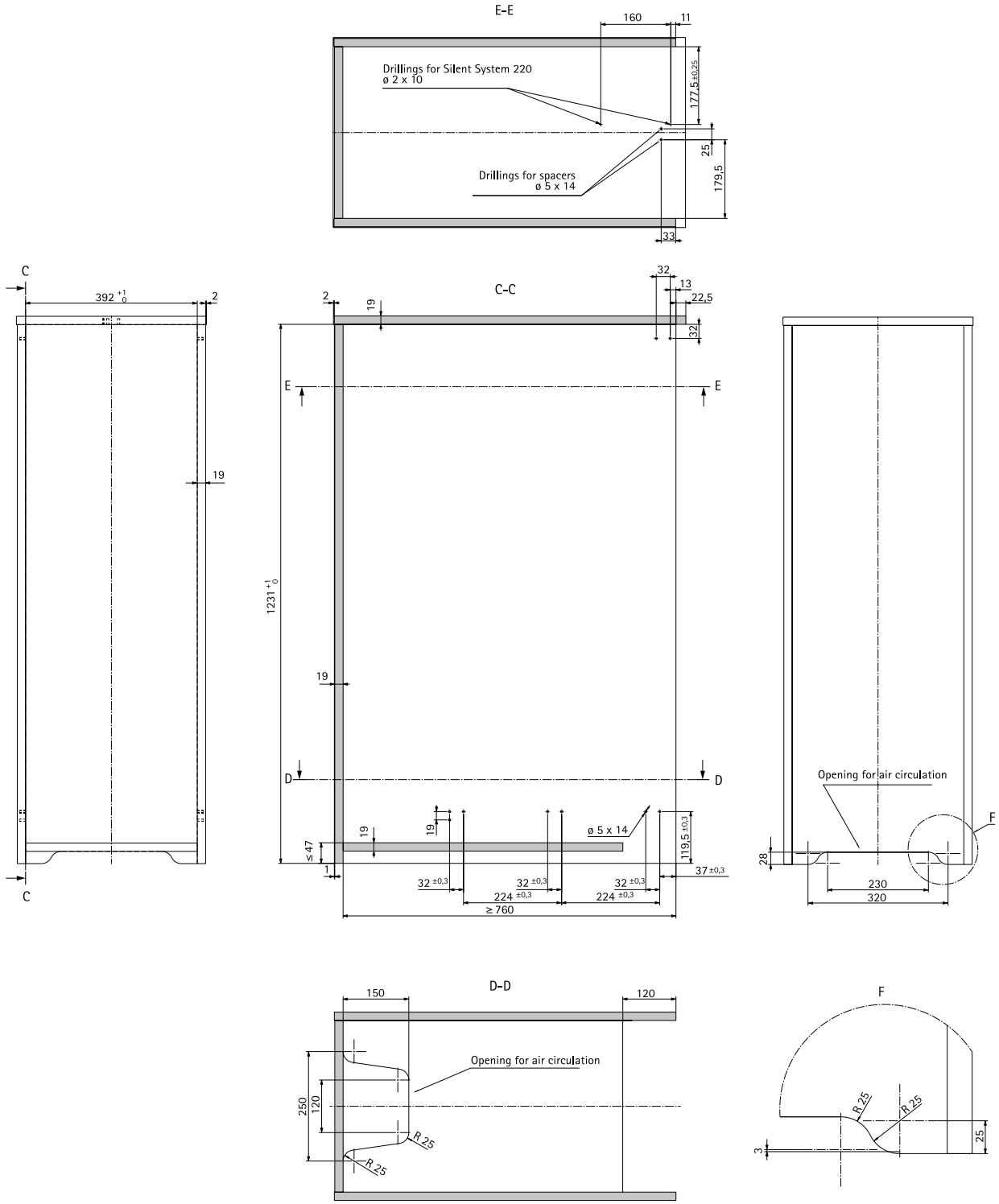

Planning dimensions

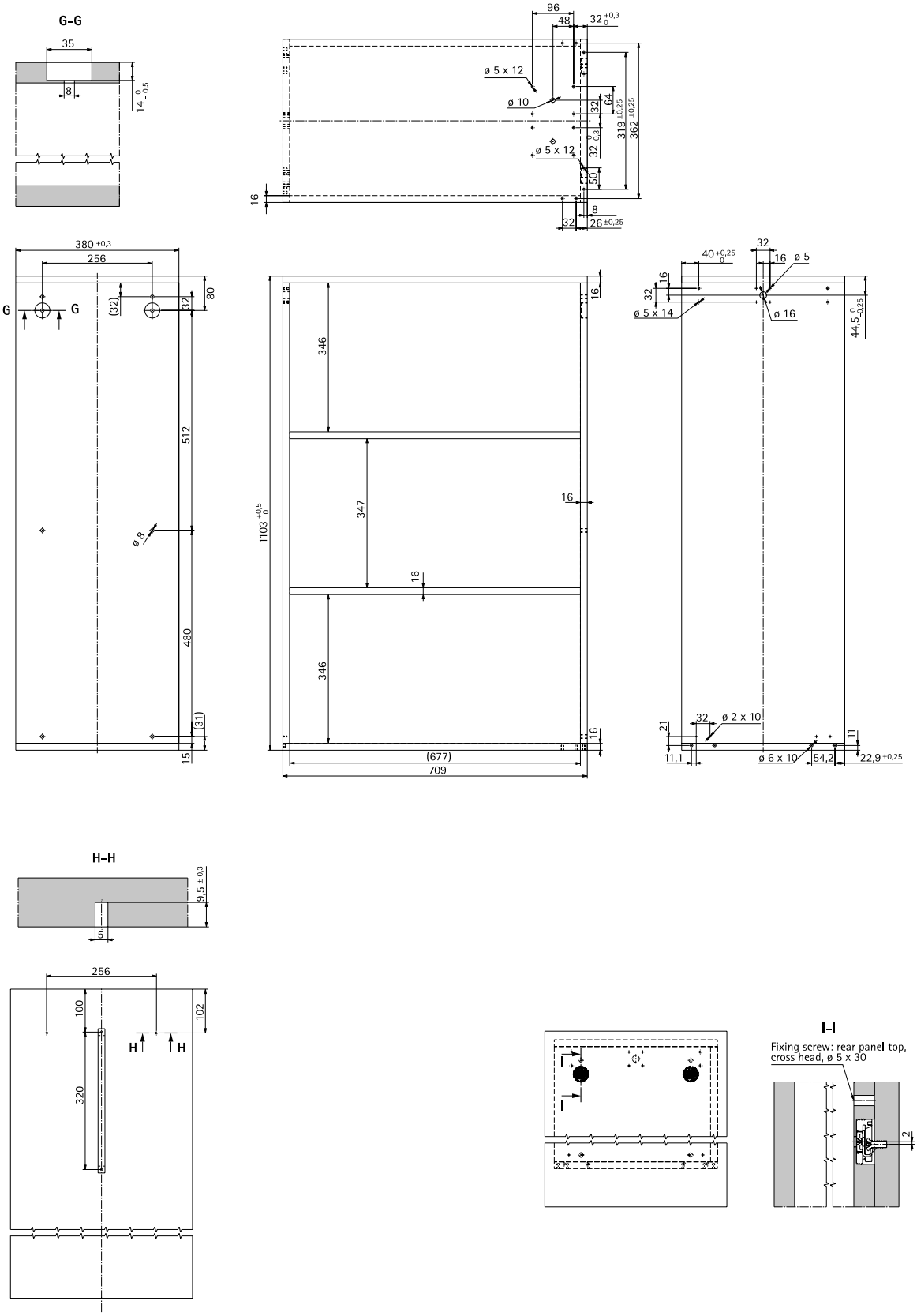

Planning dimensions, drawing scale 1:1

Height division

19 HE

Quadro Big Duplex drawer runner, full extension runner
Slide on installation runner set
Set for positioning
Additional set with Silent System

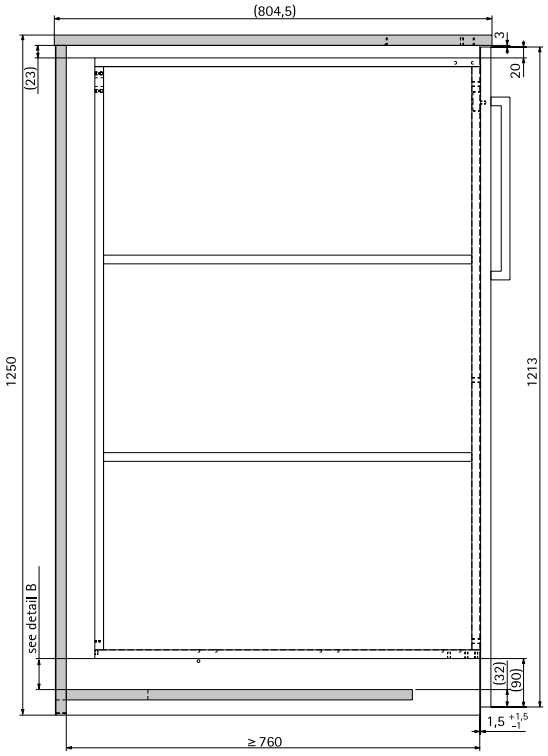

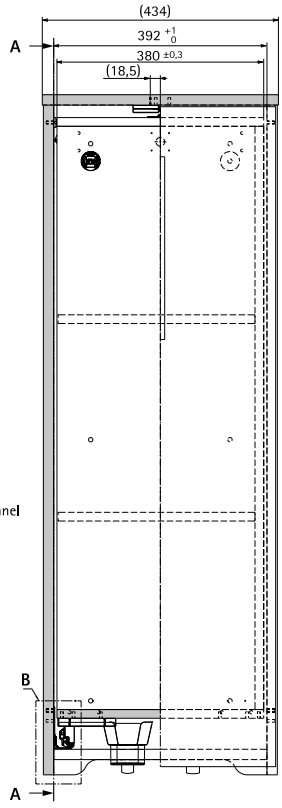

B

Comment:
The Quadro Big Duplex requires a gap of at least 2 mm = space here to the bottom panel

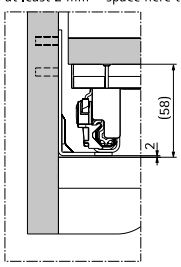

A–A

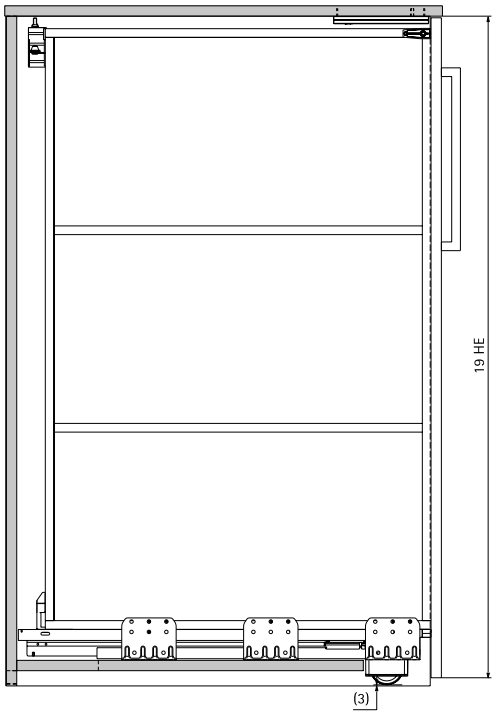

- **Big Org@Tower Wood with slide on installation**
- **Design example with Quadro Big Duplex**

Planning dimensions

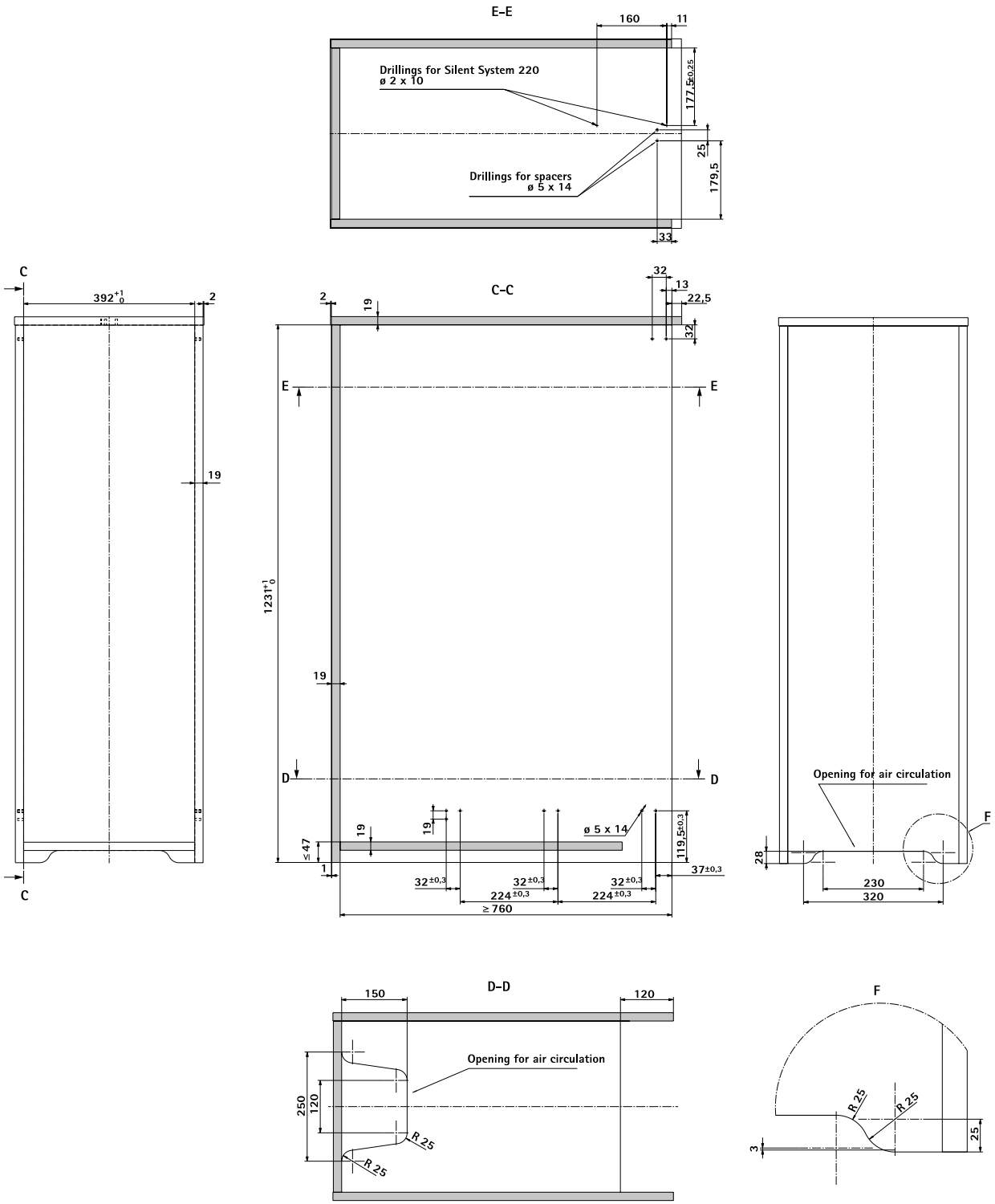

Planning dimensions

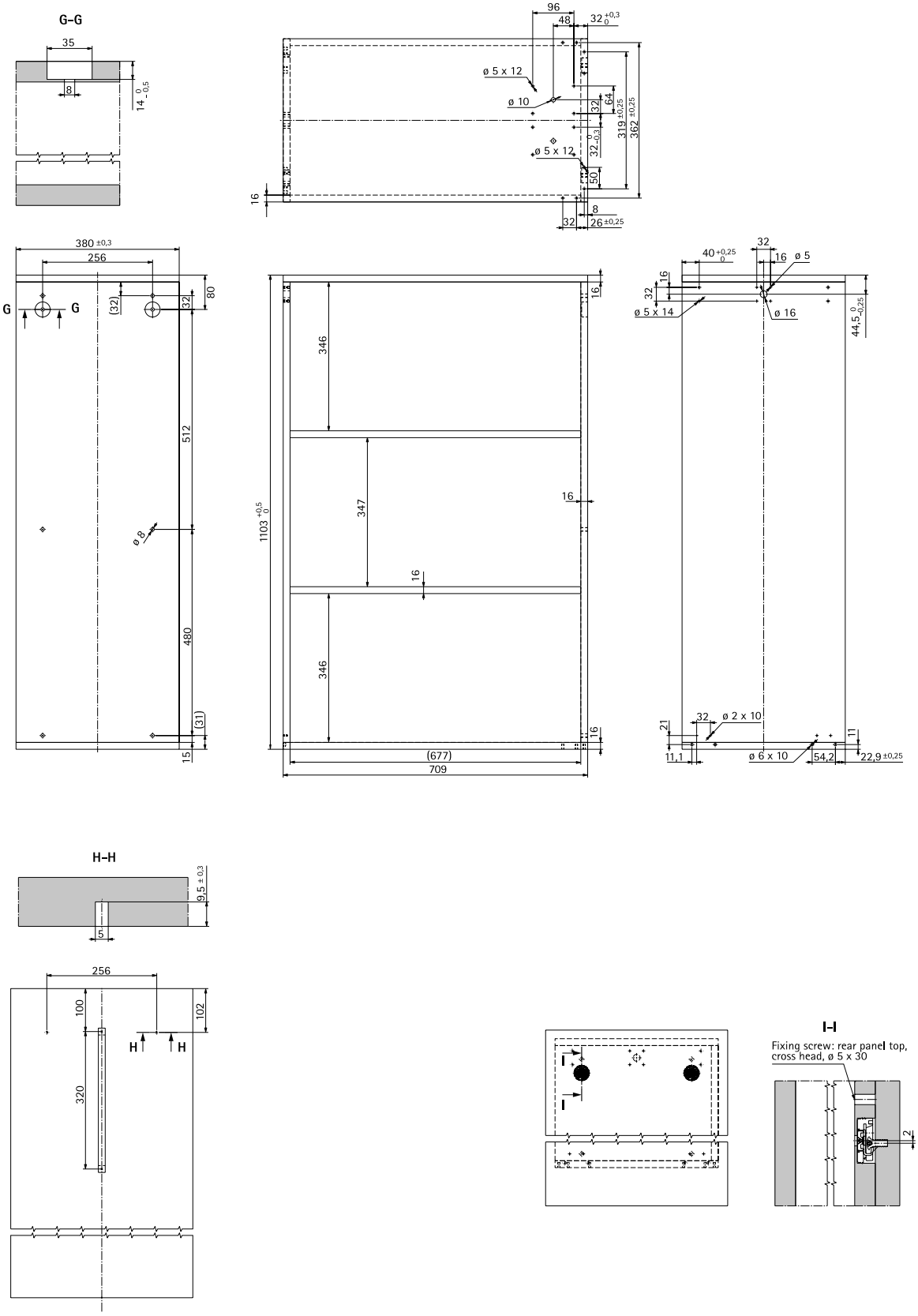

Quality that meets all the demands

Load capacity

The load capacity stated in this catalogue is understood to mean the weight of the drawer itself including front panel and contents and refers to the minimum requirements on durability under EN 15338. The applicable level is shown directly on the product.
All Hettich runner systems feature guards to prevent the drawer from rolling out and being removed unintentionally and meet the requirements of the impact test DIN EN 15338.
Fitted in the proper manner, office system Big Org@Tower Wood and Office Systema Top 2000 are suitable for furniture defined in EN 16121 and EN 16122 and meets German Social Accident Insurance (DGUV) guideline 315-410 which replaces technical report 147.

Corrosion test

Hettich runner systems satisfy the requirements on corrosion defined in EN 15338, 72-hour condensation water test to EN 6270.

Calculation of load capacity

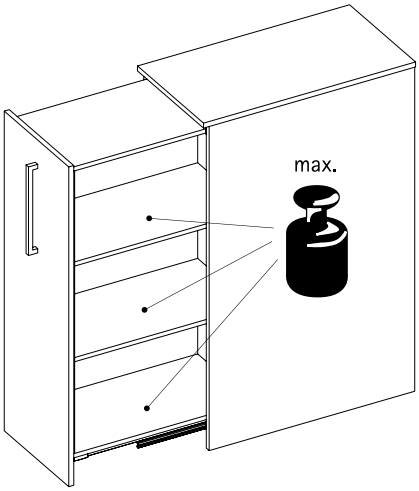

- The correct extension slide or runner is selected on the basis of the load to be expected
- The load capacity of the runners as defined by EN 16121 is calculated from the weight of the contents, internal drawer and drawer front.

  Example: Big Org@Tower Wood 3 OH, empty with castor, installed depth 760 mm:

Weight of inner cabinet body, including front panel	32.5 kg
Weight of contents	42.5 kg
Required load capacity	75 kg

Note:
The weight of possible contents varies depending on the design of the inner cabinet body.



Security for offices, shops or the home

A locking system from Hettich gives furniture added security that makes all the difference. Whether at home, in the office or in the public domain - there are many different requirements for protection and security.
Stop Control has been tried and proven in millions of applications. It provides central locking for furniture with several drawers. Fitted with the roll-out block, only one drawer can be opened at a time - optimum way to prevent mobile or free standing furniture from tipping over. The system components are virtually invisible even when the drawer is open because the activator is mounted beneath the drawer. The high quality look is preserved, whether in AvanTech, ArciTech or wooden drawers.



Invisibly smart:
The lock activator is "invisibly" mounted beneath the drawer.



Security for valuables:
The home office is the ideal place for this. It provides optimum protection for personal belongings.



Security in the shop:
Especially with many drawers, the central locking system has an important function.

hettich.com/short/b1e644

Find out more:
You can get inspiration and further product details on our website.

Locking system for drawers

Summary



Stop Control lock connector
For one sided locking 70



Stop Control lock connector
For double sided locking 70



Housing for one sided locking 71



Locking bars for one sided locking 72
Locking bars for double sided locking 73



Locks and profile steel rods 74 – 76

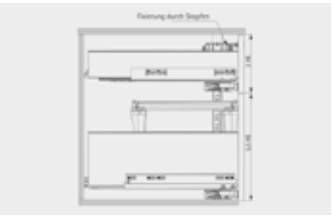

Design examples for one sided locking 78
Design examples for double sided locking 79

Hettich Technical Assistant

- Installation
- Adjusting
- Service

hettich.com/short/be3d01

Stop Control lock connector, one side



- For one sided locking, right
- For installed width from 568 mm
- Can be used with following drawer systems:
  - AvanTech YOU
  - ArciTech
  - Quadro for wooden drawers

Set comprises:
- 1 lock connector, right
- 1 securing plug

Important advice:
- Minimum front panel height including lock 3 HE (192 mm)

Order no.	PU
9 277 712	1 set

Stop Control lock connector, both sides



- For double sided locking
- For installed widths up to 568 mm
- Can be used with following drawer systems:
  - AvanTech YOU
  - ArciTech
  - Quadro for wooden drawers

Set comprises:
- 1 pair of lock connectors left / right
- 1 pair of lock activators left / right
- 2 securing plugs

Important advice:
- Minimum front panel height including lock 3 HE (192 mm)

Order no.	PU
9 277 713	1 set

hettich.com/short/a8d2df

Housing, one side



- For one sided locking, right

Set comprises:
- 1 activator, including mounting plate
- 1 housing, right

Important advice:
- 1 set required per drawer

Colour	Order no.	PU
anthracite	**9 277 688**	1 set
white	**9 277 689**	1 set

Housing, both sides



- For double sided locking

Set comprises:
- 1 set of lock activators, left / right
- 1 pair of housings, left / right

Important advice:
- 1 set required per drawer

Colour	Order no.	PU
anthracite	**9 277 690**	1 set
white	**9 277 711**	1 set

hettich.com/short/93623e

Stop Control Plus locking bars, 32 mm hole line, one side

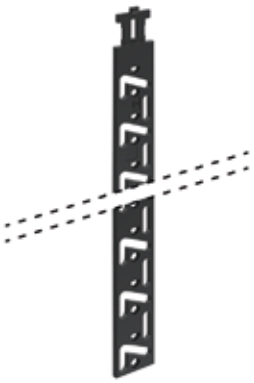

- Prevents two or more drawers being pulled out or running out at the same time
- For one sided locking

Important advice:
- Locking bars can be shortened

Length HE**	Clear inside dimensions (mm)*	**Order no.**	PU
6	381	**1 056 659**	1/200 ea.
6.5	413	**1 056 660**	1/200 ea.
7	445	**1 056 661**	1/200 ea.
7.5	477	**1 056 662**	1/200 ea.
8	509	**1 054 629**	1/200 ea.
8.5	541	**9 283 339**	1 set
9	573	**9 278 253**	1 set
10	637	**9 278 254**	1 set
10.5	669	**9 278 255**	1 set

* Clear inside height = chosen height units (32 grid) - 3 mm overlay at bottom of panel

** 1 height unit HE = 64 mm = 2 x 32 mm

Shortening the Stop Control locking bar

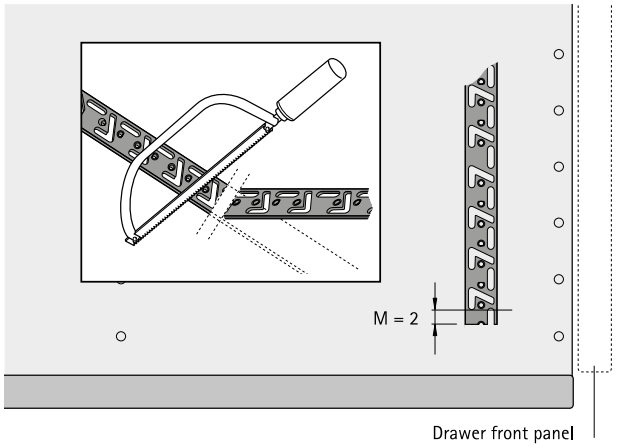

A minimum distance of M = 2 mm must be maintained when shortening a Stop Control locking bar

Please note:
When locking bars are clipped together, drawer runners with housing must not be used in this area as the housings are inoperative here.

hettich.com/short/7dd3e0

Stop Control locking bars

Stop Control locking bars, hole line 32, two side

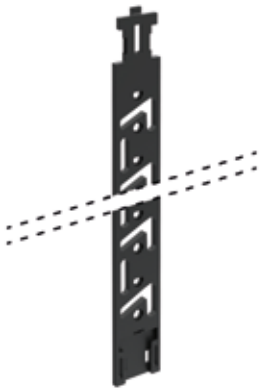

- Prevents two or more drawers being pulled out or running out at the same time
- For double sided locking

Important advice:
- Locking bars can be shortened

Length HE	Order no.	PU
5.5	**0 077 524**	1/1 pair
7.5	**0 075 547**	1/1 pair

Clear inside dimensions (mm)*	Height units (HE)**	Rod length to be shortened (L in mm)	Locking on both sides
253	4	197.5	77524 x 1
285	4.5	229.5	77524 x 1
317	5	261.5	77524 x 1
349	5.5	293.5	77524 x 1
381	6	325.5	77524 x 1
413	6.5	357.5	75547 x 1
445	7	389.5	75547 x 1
477	7.5	421.5	75547 x 1
509	8	453.5	75547 x 1
541	8.5	485.5	77524 x 2
573	9	517.5	77524 x 1 75547 x 1
605	9.5	549.5	77524 x 1 75547 x 1
637	10	581.5	77524 x 1 75547 x 1
669	10.5	613.5	77524 x 1 75547 x 1
701	11	645.5	77524 x 1 75547 x 1
733	11.5	677.5	77524 x 1 75547 x 1
765	12	709.5	77524 x 1 75547 x 1
797	12.5	741.5	77524 x 1 75547 x 1
829	13	773.5	77524 x 1 75547 x 1
861	13.5	805.5	77524 x 1 75547 x 1
893	14	837.5	75547 x 2
925	14.5	869.5	75547 x 2
957	15	901.5	75547 x 2
989	15.5	933.5	75547 x 2

* Clear inside height = chosen height units (32 grid) - 3 mm overlay at bottom of panel
** 1 height unit HE = 64 mm = 2 x 32 mm

hettich.com/short/7dd3e0

Prestige 2000 cylinder cam lock



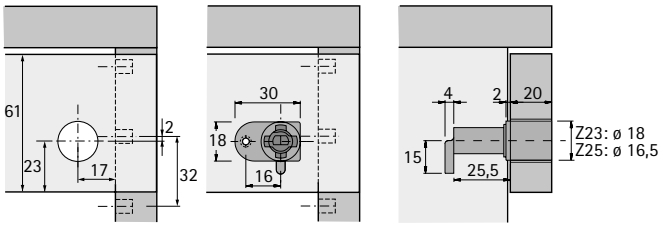

- For exchangeable barrels:
  The locks are fitted in the workshop regardless of the lock plan and the barrel is subsequently fitted with the required combinations on site
- Please order barrels separately

Page reference:
- For barrels, see pages 75 - 76
- For lock fitting situation, see page 78 - 79

Diameter mm	For barrel	**Order no.**	PU
18	Z23	**0 074 879**	1 ea.

LAD Prestige 2000 espagnolette cylinder lock



- Nickel plated

Important advice:
- Please order turn knobs separately
- Please order barrels separately

Page reference:
- For turn knobs, see Office and General catalogue
- For barrels, see page 74 - 76
- For accessories, see page 80 - 82

Order no.	PU
9 138 588	1/10 ea.

Espagnolette rod 6 / 5



- Steel nickel plated

Length mm	**Order no.**	PU
1000	**0 072 251**	1/10 ea.
1500	**0 072 253**	1/10 ea.

Z23 barrel



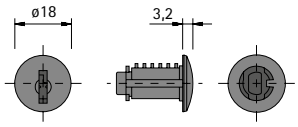

- For Prestige 2000 cylinder locks Z23, with 18 mm cylinder diameter
- General master key capability
- High gloss nickel plated
- Including 2 double-profile keys, nickel plated die-cast zinc

Design	Order no.	PU
Barrel Z23 18001 - 18020	**9 078 860**	20 ea.
Barrel Z23 18001 - 18050	**9 078 861**	50 ea.
Barrel Z23 18051 - 18100	**9 105 927**	50 ea.

Z23 barrel



- For Prestige 2000 cylinder locks Z23, with 18 mm cylinder diameter
- Single key operation
- General master key capability
- High gloss nickel plated
- Including 2 double-profile keys, nickel plated die-cast zinc

Design	Order no.	PU
Barrel Z23 18001	**9 078 862**	1 ea.
Barrel Z23 18002	**9 078 865**	1 ea.
Barrel Z23 18003	**9 078 867**	1 ea.
Barrel Z23 18004	**9 078 871**	1 ea.
Barrel Z23 18005	**9 078 874**	1 ea.
Barrel Z23 18006	**9 078 877**	1 ea.
Barrel Z23 18007	**9 078 878**	1 ea.
Barrel Z23 18008	**9 078 886**	1 ea.
Barrel Z23 18009	**9 078 888**	1 ea.
Barrel Z23 18010	**9 078 890**	1 ea.
Barrel Z23 18011	**9 078 894**	1 ea.
Barrel Z23 18012	**9 078 899**	1 ea.
Barrel Z23 18013	**9 078 902**	1 ea.
Barrel Z23 18014	**9 078 904**	1 ea.
Barrel Z23 18015	**9 078 911**	1 ea.
Barrel Z23 18016	**9 078 912**	1 ea.
Barrel Z23 18017	**9 078 915**	1 ea.
Barrel Z23 18018	**9 078 917**	1 ea.
Barrel Z23 18019	**9 078 920**	1 ea.
Barrel Z23 18020	**9 078 922**	1 ea.
Barrel Z23 18021	**9 078 925**	1 ea.
Barrel Z23 18022	**9 078 926**	1 ea.
Barrel Z23 18023	**9 078 928**	1 ea.
Barrel Z23 18024	**9 078 929**	1 ea.
Barrel Z23 18025	**9 078 930**	1 ea.

Design	Order no.	PU
Barrel Z23 18026	**9 078 931**	1 ea.
Barrel Z23 18027	**9 078 932**	1 ea.
Barrel Z23 18028	**9 078 934**	1 ea.
Barrel Z23 18029	**9 078 936**	1 ea.
Barrel Z23 18030	**9 078 939**	1 ea.
Barrel Z23 18031	**9 078 940**	1 ea.
Barrel Z23 18032	**9 078 941**	1 ea.
Barrel Z23 18033	**9 078 943**	1 ea.
Barrel Z23 18034	**9 078 642**	1 ea.
Barrel Z23 18035	**9 078 643**	1 ea.
Barrel Z23 18036	**9 078 644**	1 ea.
Barrel Z23 18037	**9 078 645**	1 ea.
Barrel Z23 18038	**9 078 646**	1 ea.
Barrel Z23 18039	**9 078 650**	1 ea.
Barrel Z23 18040	**9 078 656**	1 ea.
Barrel Z23 18041	**9 078 660**	1 ea.
Barrel Z23 18042	**9 078 664**	1 ea.
Barrel Z23 18043	**9 078 667**	1 ea.
Barrel Z23 18044	**9 078 670**	1 ea.
Barrel Z23 18045	**9 078 672**	1 ea.
Barrel Z23 18046	**9 078 675**	1 ea.
Barrel Z23 18047	**9 078 678**	1 ea.
Barrel Z23 18048	**9 078 679**	1 ea.
Barrel Z23 18049	**9 078 680**	1 ea.
Barrel Z23 18050	**9 078 684**	1 ea.

hettich.com/short/7faddb

Removal key for Z23 / Z32 / Z42 and Z25 barrels



- The cylinder can only be replaced when the lock cylinder is open
- It must first be unlocked with the matching key!
- The removal key does not have any locking function

Order no.	PU
0 072 509	1 ea.

General master key



- Brass

Order no.	PU
9 078 980	1 ea.

- **Design example – locking system for wooden drawers**
- **Variable installed width / hole line 32 mm / one sided locking**

Planning dimensions

	Actro 5D 40 kg		Actro 5D 70 kg			Quadro V6		
Nominal length NL mm	Min. installed depth LT mm	b1	Min. installed depth LT mm	b1	b2	Min. installed depth LT mm	b1	b2
750	-	-	755	256	416	-	-	-
700	-	-	705	256	416	-	-	-
650	-	-	655	256	416	-	-	-
600	605	256	605	256	320	613	352	-
580	-	-	585	256	320	593	352	-
550	555	256	555	256	320	563	288	224
520	525	256	525	256	320	533	288	224
500	505	256	505	256	320	513	288	224
480	485	256	-	-	-	493	256	-
450	455	256	455	256	288	463	256	-
420	425	224	-	-	-	433	224	-
400	405	224	-	-	-	413	224	-
380	385	224	-	-	-	393	224	-
350	355	224	-	-	-	363	192	-
320	325	160	-	-	-	333	192	-
300	305	160	-	-	-	313	192	-
280	-	-	-	-	-	293	160	-
270	275	160	-	-	-	-	-	-
250	255	160	-	-	-	263	142	-

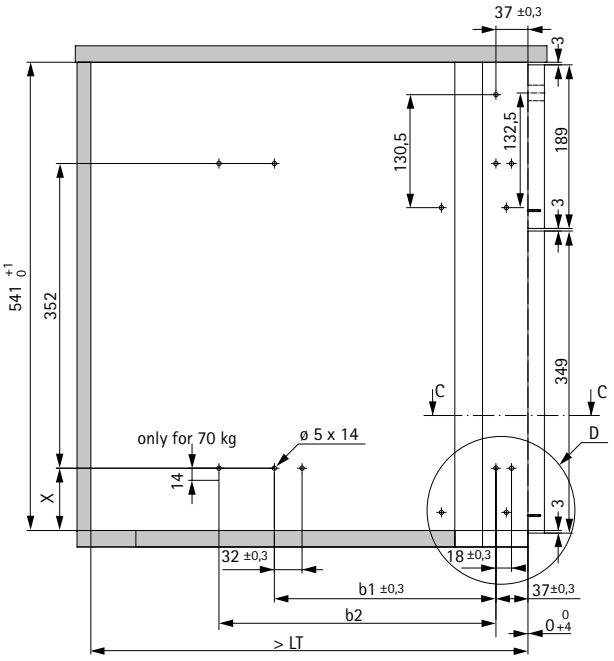

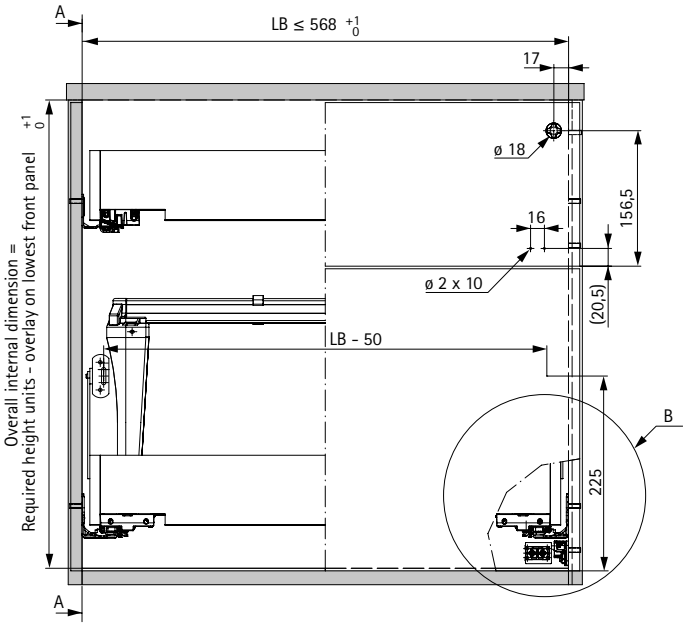

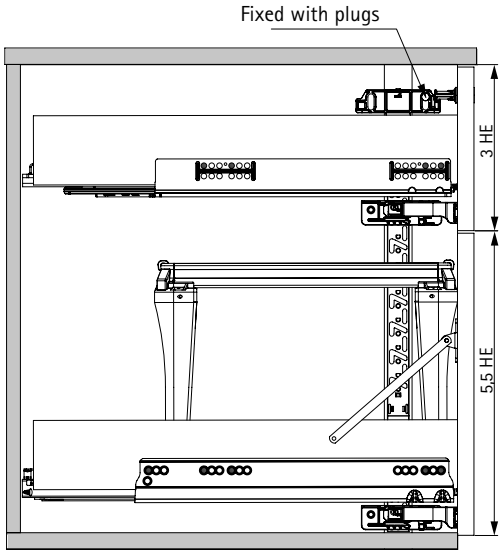

Detail B

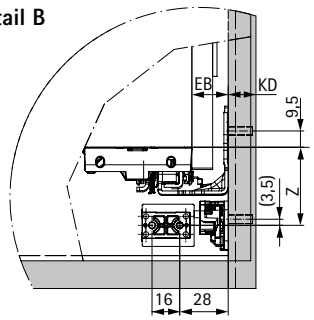

Detail D

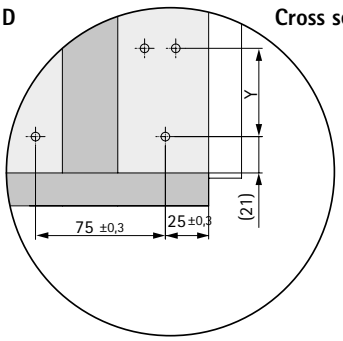

Cross section C-C

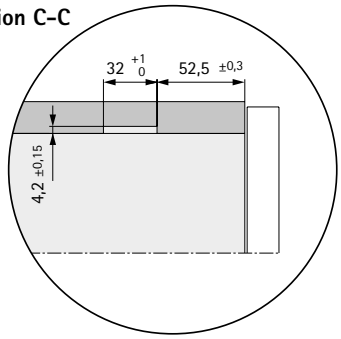

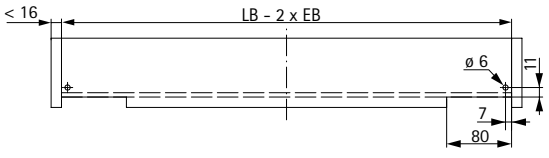

	Actro 5D	Quadro V6
X mm	72	69
Y mm	51	48
Z mm	45	42

- **Design example – locking system for wooden drawers**
- **Variable installed width / hole line 32 mm / double sided locking**

Planning dimensions

	Actro 5D 40 kg		Actro 5D 70 kg			Quadro V6		
Nominal length NL mm	Min. installed depth LT mm	b1	Min. installed depth LT mm	b1	b2	Min. installed depth LT mm	b1	b2
750	-	-	755	256	416	-	-	-
700	-	-	705	256	416	-	-	-
650	-	-	655	256	416	-	-	-
600	605	256	605	256	320	613	352	-
580	-	-	585	256	320	593	352	-
550	555	256	555	256	320	563	288	224
520	525	256	525	256	320	533	288	224
500	505	256	505	256	320	513	288	224
480	485	256	-	-	-	493	256	-
450	455	256	455	256	288	463	256	-
420	425	224	-	-	-	433	224	-
400	405	224	-	-	-	413	224	-
380	385	224	-	-	-	393	224	-
350	355	224	-	-	-	363	192	-
320	325	160	-	-	-	333	192	-
300	305	160	-	-	-	313	192	-
280	-	-	-	-	-	293	160	-
270	275	160	-	-	-	-	-	-
250	255	160	-	-	-	263	142	-

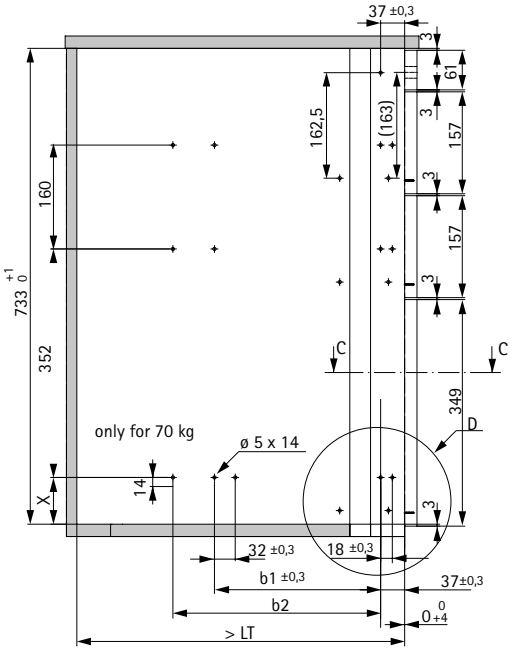

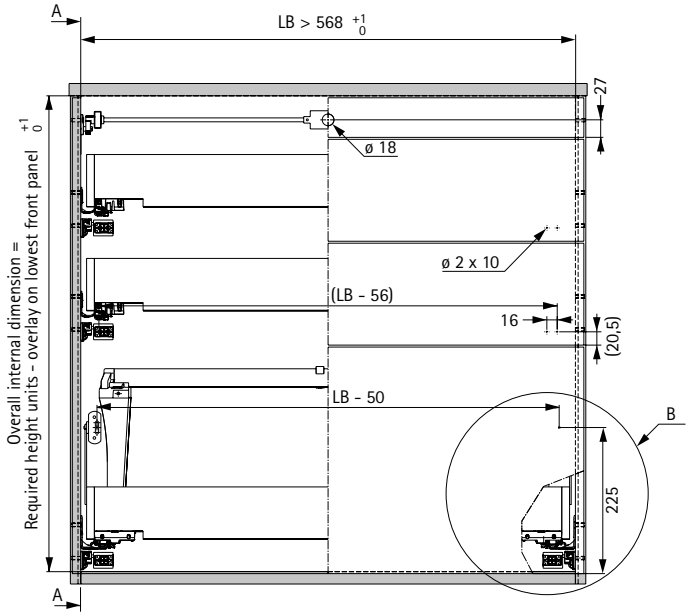

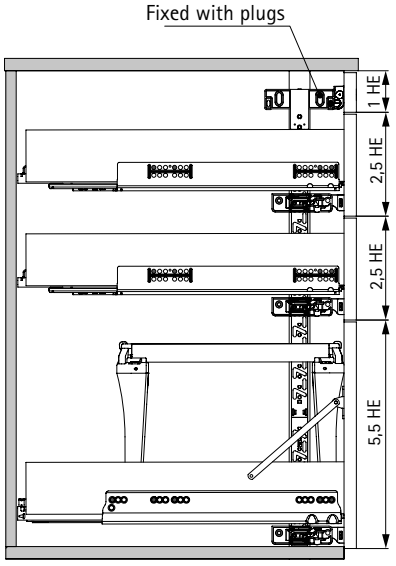

Detail B

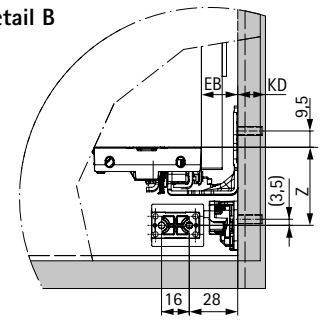

Detail D

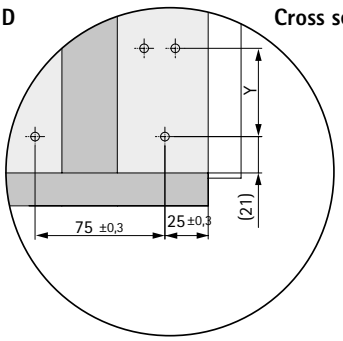

Cross section C-C

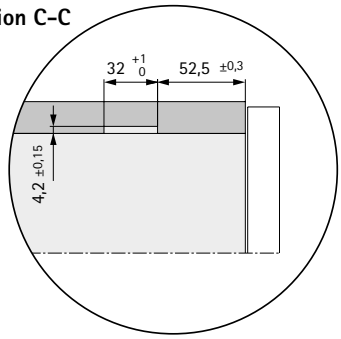

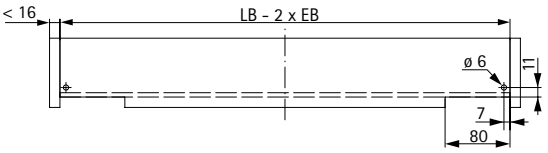

	Actro 5D	Quadro V6
X mm	72	69
Y mm	51	48
Z mm	45	42

Direct fixing screw



- Countersunk head
- Pozidrive screw

Dimensions mm	Finish	**Order no.**	PU
ø 6 x 14	nickel plated	**9 137 114**	200 ea.
ø 6.3 x 10.5	galvanised	**0 051 264**	200 ea.
ø 6.3 x 14	galvanised	**0 051 265**	200 ea.

Chipboard screw / countersunk head



- Countersunk head
- Pozidrive screw

Dimensions mm	Finish	**Order no.**	PU
ø 3.5 x 12	galvanised	**0 058 244**	200 ea.
ø 3.5 x 16	nickel plated	**0 071 925**	200 ea.
ø 3.5 x 20	nickel plated	**0 071 924**	1/200 ea.
ø 4 x 16	nickel plated	**0 010 085**	200 ea.

Chipboard screw / pan head



- Panhead
- Pozidrive screw

Dimensions mm	Finish	**Order no.**	PU
ø 4 x 12	galvanised	**0 058 243**	200 ea.

End screw



- M4 x 9 mm

Dimensions mm	Finish	**Order no.**	PU
M4 x 9	nickel plated	**0 079 527**	200 ea.

Pull-out shelf locating catch, set



- Easy to add locating catch for pull-out shelves
- Automatically engages on pulling shelf out all the way
- Unlocks automatically in response to defined closing force
- Used instead of the standard fitted plug
- 1 mount, left and right, and 2 studs are required per pull-out shelf

Set comprises:
- 1 mount, left and right
- 2 studs

Colour	**Order no.**	PU
white	**9 257 725**	1/100 set
anthracite	**9 257 727**	1/100 set

Spacer disc



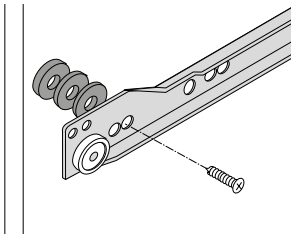

- To be used on drawers fitted behind a door
- The spacer discs bridge the door offset
- To span greater spaces, several discs can be clipped together
- Needless to say, the discs can also be used for evening out tolerances
- Plastic, white

Distance mm	**Order no.**	PU
3,0	**0 033 681**	1/100 ea.
4,0	**0 033 682**	1/100 ea.
5,0	**0 033 683**	1/100 ea.

Front panel adjuster



- For 2-dimensional adjustment of fronts on 4-sided drawers
- For knocking into the drawer front panel
- Plastic, white

Order no.	PU
0 071 833	1/200 ea.

RV 8 rear panel connector



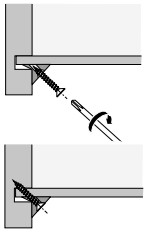

- For fixing drawer bottom panels and rear panels
- Plastic, white
- Screw, ø 3.5 x 20 mm, galvanised steel

Order no.	PU
0 079 438	1/200 ea.

Door damper for pressing in



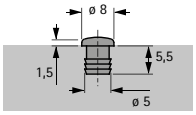

- For drilling ø 5 mm x 5.5 mm
- Transparent plastic

Order no.	PU
9 079 298	1/1000 ea.

Door damper for pressing in



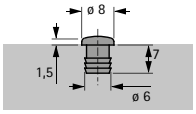

- For drilling ø 6 mm x 7 mm
- Plastic

Colour	Order no.	PU
brown	**0 021 154**	1/1000 ea.
white	**0 025 048**	1/1000 ea.
beige	**0 047 353**	1/1000 ea.

Door damper for sticking on



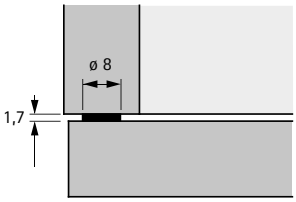

- Self adhesive
- Transparent plastic

Order no.	PU
0 072 120	1/50 ea.
0 046 695	1/1000 ea.

Spacer profile

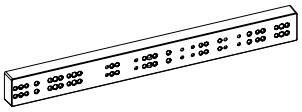

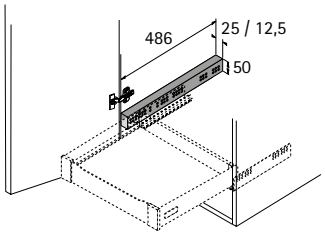

- For bridging the door/hinge protrusion
- To span greater spaces, several profiles can be clippedon top of one another
- Load capacity max. 20 kg
- Plastic, white

Advice:
- Depending on application, recommended screw on positions b1 etc. will vary for the drawer runner
- Application, wooden drawer / FR, max. NL 450 mm
- Application, wooden drawer / KA 4532, max. NL 600 mm

Width x depth x height mm	Order no.	PU
25 x 486 x 50	**0 013 952**	1 ea.
12.5 x 486 x 50	**9 115 956**	1 ea.

hettich.com/short/272dd3

Learn more about the Hettich family-owned company and get to know us better!

IT'S ALL IN HETTICH

HTT093

Hettich