Drawer systems
AvanTech YOU

Hettich

As individual as you – AvanTech YOU
The AvanTech YOU drawer system scores from design diversity and creative flexibility, from concealed working parts and perfect performance as well as from an efficient product concept geared to the customer.

Design distinctive drawers:
The AvanTech YOU drawer is distinguished by immaculate beauty from its slimline and sleek 13mm drawer side profile. And by the ability to turn personal ideas into reality every time.

Get a variety of clever functions:
one drawer, two runners and numerous user friendly functions. Flexibly combinable with each other by using one and the same drilling pattern.

Efficient and cost effective production:
The comprehensive platform concept and perfect product adjustments to production and assembly processes guarantee cost effectiveness and efficient work flows while at the same time providing the basis for a broad product lineup.

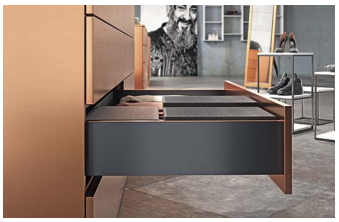

Design variety and creative flexibility:
Different shapes, colours and materials consistently continue furniture design on the inside too.

Many different options for customisation:
With creative design flexibility in every detail. Attractive highlights are added with design profiles and DesignCapes.

Precision furniture design:
AvanTech YOU competently combines technology, functionality and performance to suit any preference.

hettich.com/short/a07bc8

Find out more:
You can get inspiration and further product details on our website.

Summary

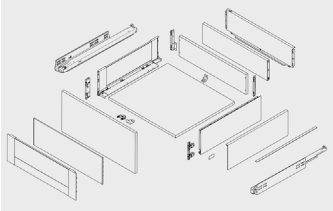

AvanTech YOU
- Range summary 4 - 5
- Exploded diagram 6 - 7
- Overview of components 6 - 7

AvanTech YOU drawer
- Height 77 mm 8 - 10
- Height 101 mm 12 - 14
- Height 139 mm 16 - 18

AvanTech YOU pot-and-pan drawer
- Height 187 mm 20 - 22
- Height 251 mm 24 - 26

AvanTech YOU Inlay pot-and-pan drawer
- Height 187 mm 28 - 30

AvanTech YOU internal front panel / rear panel
- Front options for interior drawer / pot-and-pan drawers 32 - 37
- Rear panel options 38 - 41

AvanTech YOU Design options / Illumination / Connector for thin front panel / Accessories
- Design elements 42 - 51
- Illumination 52 - 53
- Connection, thin front 56
- Other accessories 57 - 59

AvanTech YOU drawer runners
- Actro YOU with Silent System 60 - 61
- Push to open Silent for Actro YOU 62 - 63
- Quadro YOU with Silent System / Push to open 64 - 65
- Push to open Silent for Quadro YOU 68

Hettich Technical Assistant
- Assembly / Adjustment
- Service

hettich.com/short/f1d89a

AvanTech YOU double walled drawer system

- **Range summary**
- **Powder coated steel, silver / white / anthracite**

Drawer, height 77 mm

8 - 10

Drawer, height 101 mm

12 - 14

Drawer, height 139 mm

16 - 18

Pot-and-pan drawer, height 187 mm

20 - 22

Pot-and-pan drawer, height 251 mm

24 - 26

Inlay pot-and-pan drawer, height 187 mm

28 - 30

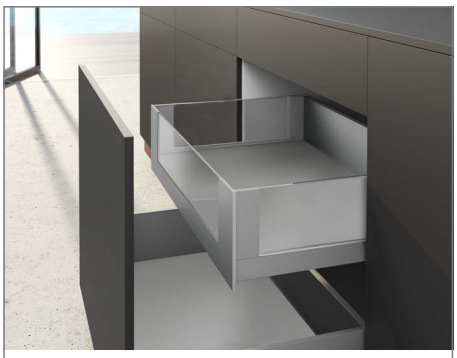

Front options for interior drawer / pot-and-pan drawer

32 - 37

Rear panel options

38 - 41

Internal drawer

42

Narrow base unit

43

Tall unit

44

Pantry

45

AvanTech YOU double walled drawer system

- **Range summary**
- **Powder coated steel, silver / white / anthracite**

Drawer with bottom cutout

46 - 47

Design options

50 - 51

Illumination

52 - 53

Connection for thin front panels

56

Other accessories

57 - 59

Drawer runners

60 - 69

Push to open Silent

62 - 63

Exploded diagram / component overview

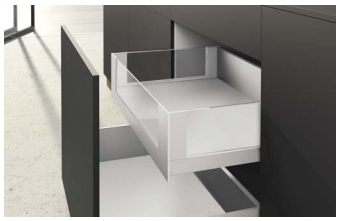

Exploded diagram

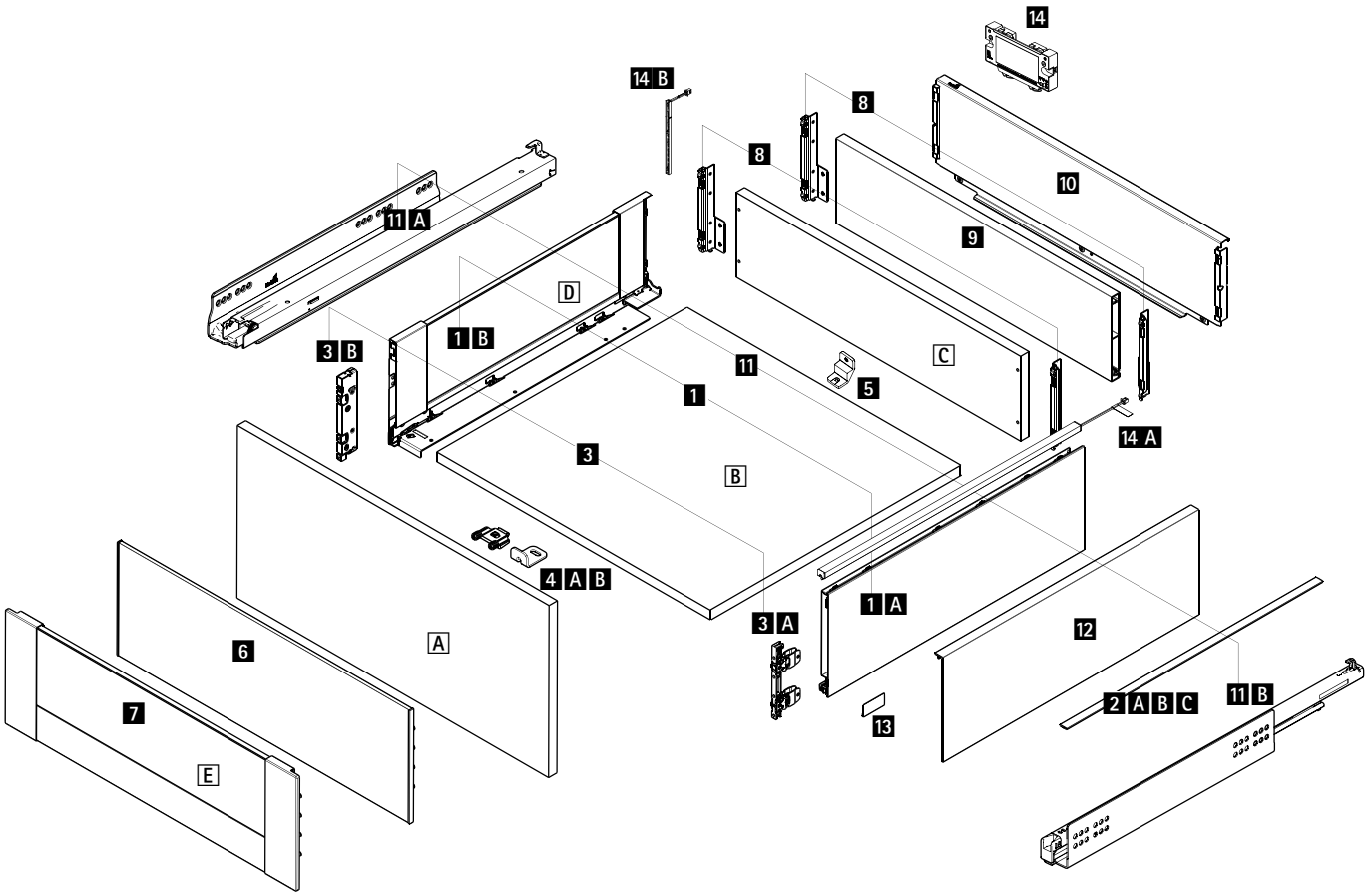

AvanTech YOU system components

Basic components

1 Drawer side profile, left and right
- 1 A AvanTech YOU **or**
- 1 B AvanTech YOU Inlay

2 Design profile for top side of AvanTech YOU drawer side profile

A Front, see front options

3 Front connectors, left and right
- 3 A for AvanTech YOU **or**
- 3 B for AvanTech YOU Inlay

4 A / B Stabiliser for front panel / internal front panel

C Rear panel, see rear panel options

5 Rear panel stabiliser

Front panel options

A Front panel

6 Front panel for internal drawer / internal pot-and-pan drawer

7 Customisable front panel for internal drawer / internal pot-and-pan drawer

Rear panel options

C Wooden rear panel

8 Rear panel connector, left and right

9 Rear panel profile for cutting to length

10 Steel rear panel in standard cabinet body widths

Design options

2 A / B / C Design profile in drawer side profile colour / foil wrapped / customisable

12 DesignCape

13 Branding clip

14 A / B Illumination for drawer side profile / drawer side profile Inlay

Drawer runners

11 A Actro YOU full extension runner

11 B Quadro YOU full extension runner

Wooden elements cut to size

A Front panel

B Bottom panel

C Wooden rear panel

D AvanTech YOU Inlay - insert in any chosen material

E Customisable internal front panel - insert in any chosen material

AvanTech YOU double walled drawer system

- **Drawer height 77 mm**
- **Powder coated steel, silver / white / anthracite**

Planning / installation dimensions

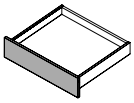

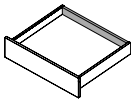

* All dimensions identical for Actro YOU and Quadro YOU

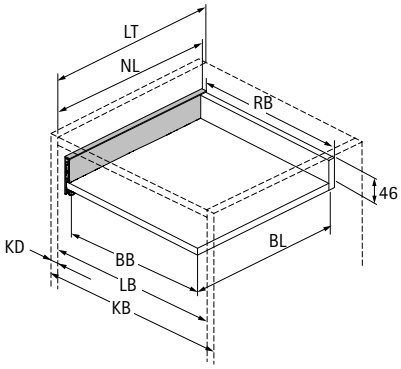

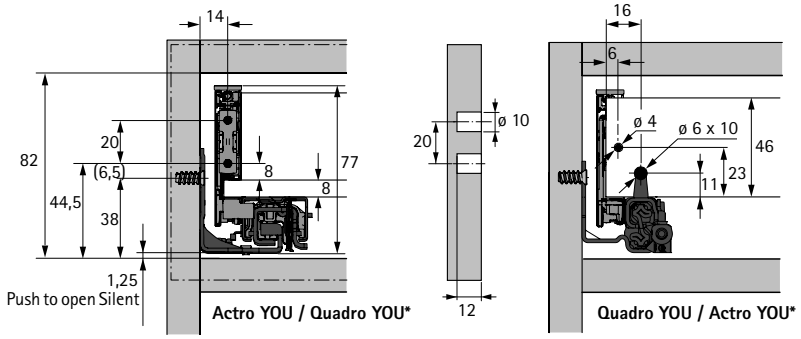

BB Bottom panel width	KB Cabinet body width	NL Nominal length	LB Clear inside width
BL Bottom panel length	RB Rear panel width	KD Cabinet body side thicknesses	LT Clear inside depth

Dimension	mm
BL	NL - 26
BB	LB - 24
RB	LB - 24
LT	NL + 3

Positions for attaching Actro YOU / Quadro YOU drawer runner

Nominal length mm	Hole spacing b1 mm	b2 mm**
400	224	
450	256	288
500	256	320
550	256	320

* Hole spacing b2 only for Actro YOU XL

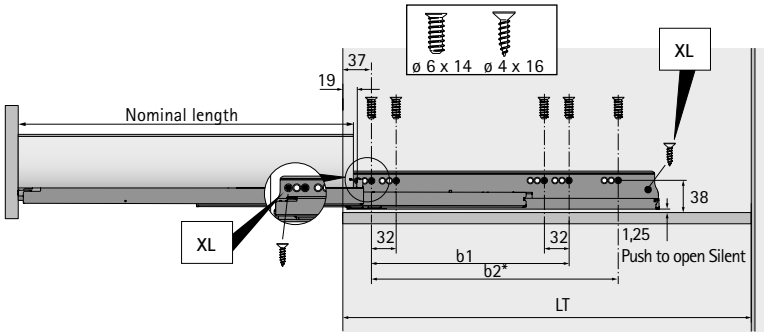

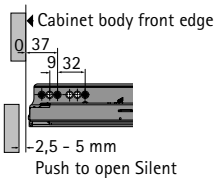

AvanTech YOU double walled drawer system

- **Drawer height 77 mm**
- **Powder coated steel, silver / white / anthracite**

1 A Drawer side profile set, height 77 mm

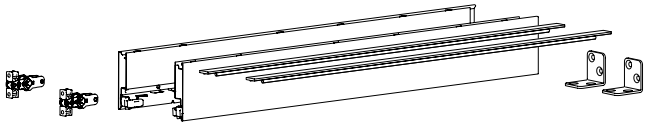

- Integrated vertical and lateral adjustment
- Powder coated steel

Set comprises:
- 1 drawer side profile, left and right
- 2 design profiles in drawer side profile colour
- 2 drawer front connectors for screwing on
- 2 rear panel stabilisers
- Fixing material

Nominal length mm	Order no. / Colour			PU
	silver	white	anthracite	
400	**9 255 240**	**9 255 280**	**9 255 320**	1 set
450	**9 255 241**	**9 255 281**	**9 255 321**	1 set
500	**9 255 242**	**9 255 282**	**9 255 322**	1 set
550	**9 255 243**	**9 255 283**	**9 255 323**	1 set

1 A Drawer side profile, height 77 mm

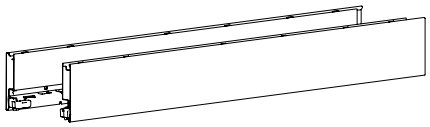

- Integrated vertical and lateral adjustment
- Powder coated steel

- 2 A / B / C Design profile must be ordered separately
- 3 A Drawer front connector must be ordered separately

Nominal length mm	Order no. / Colour / Mounting side						PU
	silver		white		anthracite		
	left	right	left	right	left	right	
400	**9 255 000**	**9 255 001**	**9 255 080**	**9 255 081**	**9 255 160**	**9 255 161**	10 ea.
450	**9 255 002**	**9 255 003**	**9 255 082**	**9 255 083**	**9 255 162**	**9 255 163**	10 ea.
500	**9 255 004**	**9 255 005**	**9 255 084**	**9 255 085**	**9 255 164**	**9 255 165**	10 ea.
550	**9 255 006**	**9 255 007**	**9 255 086**	**9 255 087**	**9 255 166**	**9 255 167**	10 ea.

2 A Design profile in drawer side profile colour

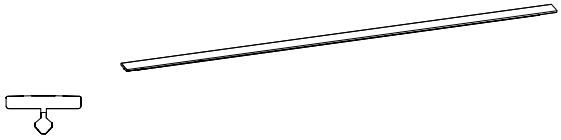

- Any chosen top edge for drawer side profile
- For clipping on
- Plastic, solid coloured

Nominal length mm	Order no. / Colour			PU
	silver	white	anthracite	
400	**9 255 807**	**9 255 816**	**9 255 825**	200 ea.
450	**9 255 808**	**9 255 817**	**9 255 826**	200 ea.
500	**9 255 809**	**9 255 818**	**9 255 827**	200 ea.
550	**9 255 810**	**9 255 819**	**9 255 828**	200 ea.

Advice

- Design options 42 - 51
- Illumination 52 - 53
- Accessories 57 - 59
- Actro YOU / Quadro YOU drawer runners 60 - 69
- Push to open Silent 62 - 67

hettich.com/short/fcf727

3 A Drawer front connector for drawer side profile, height 77 mm

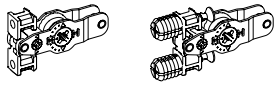

- For screwing on or knocking in
- Steel, plastic

Mounting option	**Order no.**	PU
for screwing on	**9 255 832**	100 ea.
for knocking in	**9 255 833**	100 ea.

5 Stabiliser, rear panel

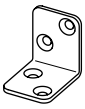

- For wooden rear panel in conjunction with 77 mm system height
- 1 each for < 600 mm cabinet body width; 2 each ≥ 600 mm; 3 each ≥ 900 mm; 4 each = 1200 mm
- Steel

Order no.	PU
0 079 665	1/100 ea.

Advice

- Design options 42 - 51
- Illumination 52 - 53
- Accessories 57 - 59
- Actro YOU / Quadro YOU drawer runners 60 - 69
- Push to open Silent 62 - 67

hettich.com/short/fcf727

AvanTech YOU double walled drawer system

- **Drawer height 101 mm**
- **Powder coated steel, silver / white / anthracite**

Planning / installation dimensions

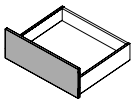

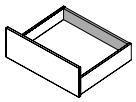

* All dimensions identical for Actro YOU and Quadro YOU

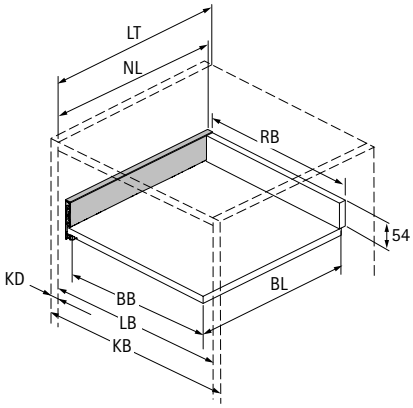

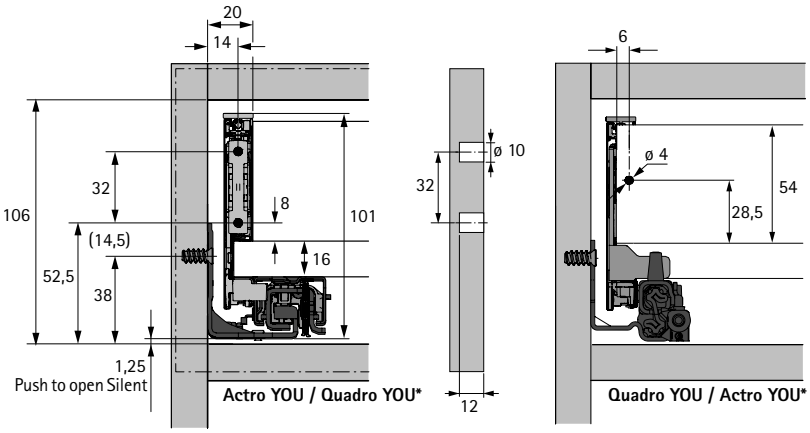

BB Bottom panel width	KB Cabinet body width	NL Nominal length	LB Clear inside width
BL Bottom panel length	RB Rear panel width	KD Cabinet body side thicknesses	LT Clear inside depth

Dimension		mm
BL		NL - 21
BB		LB - 24
RB		LB - 24
LT		NL + 3
LT	Internal drawer / internal pot-and-pan drawer	NL + 12
LT	Internal drawer / internal pot-and-pan drawer Push to open Push to open Silent	NL + 21

Positions for attaching Actro YOU / Quadro YOU drawer runner

Nominal length mm	Hole spacing b1 mm	b2 mm**
270	160	
300	160	
350	224	
400	224	
450	256	288
500	256	320
550	256	320
600	256	320
650*	256	416

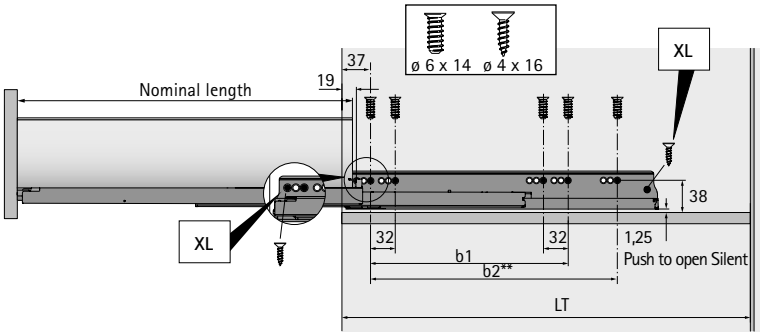

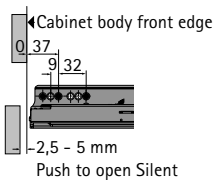

* Nominal length 650 mm only for Actro YOU XL
** Hole spacing b2 only for Actro YOU XL

AvanTech YOU double walled drawer system

- **Drawer height 101 mm**
- **Powder coated steel, silver / white / anthracite**

1 A Drawer side profile set, height 101 mm

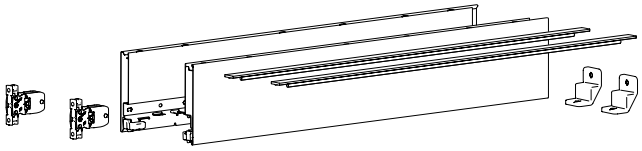

- Integrated vertical, lateral and tilt adjustment
- Powder coated steel

Set comprises:
- 1 drawer side profile, left and right
- 2 design profiles in drawer side profile colour
- 2 drawer front connectors for screwing on
- 2 rear panel stabilisers
- Fixing material

Nominal length mm	Order no. / Colour			PU
	silver	white	anthracite	
270	9 255 244	9 255 284	9 255 324	1 set
300	9 255 245	9 255 285	9 255 325	1 set
350	9 255 246	9 255 286	9 255 326	1 set
400	9 255 247	9 255 287	9 255 327	1 set
450	9 255 248	9 255 288	9 255 328	1 set
500	9 255 249	9 255 289	9 255 329	1 set
550	9 255 250	9 255 290	9 255 330	1 set
600	9 255 251	9 255 291	9 255 331	1 set
650	9 255 252	9 255 292	9 255 332	1 set

1 A Drawer side profile, height 101 mm

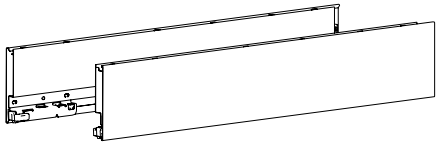

- Integrated vertical, lateral and tilt adjustment
- Powder coated steel

- 2 A / B / C Design profile must be ordered separately
- 3 A Drawer front connector must be ordered separately
- 12 DesignCape can be ordered separately
- 5 Rear panel stabilizer must be ordered separately

Nominal length mm	Order no. / Colour / Mounting side						PU
	silver		white		anthracite		
	left	right	left	right	left	right	
270	9 255 008	9 255 009	9 255 088	9 255 089	9 255 168	9 255 169	20 ea.
300	9 255 010	9 255 011	9 255 090	9 255 091	9 255 170	9 255 171	20 ea.
350	9 255 012	9 255 013	9 255 092	9 255 093	9 255 172	9 255 173	20 ea.
400	9 255 014	9 255 015	9 255 094	9 255 095	9 255 174	9 255 175	20 ea.
450	9 255 016	9 255 017	9 255 096	9 255 097	9 255 176	9 255 177	20 ea.
500	9 255 018	9 255 019	9 255 098	9 255 099	9 255 178	9 255 179	20 ea.
550	9 255 020	9 255 021	9 255 100	9 255 101	9 255 180	9 255 181	20 ea.
600	9 255 022	9 255 023	9 255 102	9 255 103	9 255 182	9 255 183	20 ea.
650	9 255 024	9 255 025	9 255 104	9 255 105	9 255 184	9 255 185	20 ea.

Advice

- Front options for interior drawer / pot-and-pan drawer 32 - 37
- Rear panel options 38 - 41
- Design options 42 - 51
- Illumination 52 - 53
- Accessories 57 - 59
- Actro YOU / Quadro YOU drawer runners 60 - 69
- Push to open Silent 62 - 67

hettich.com/short/5e5af6

2 A Design profile in drawer side profile colour

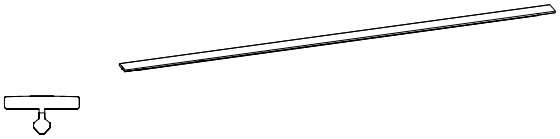

- Any chosen top edge for drawer side profile
- For clipping on
- Plastic, solid coloured

Nominal length mm	Order no. / Colour			PU
	silver	white	anthracite	
270	**9 255 804**	**9 255 813**	**9 255 822**	200 ea.
300	**9 255 805**	**9 255 814**	**9 255 823**	200 ea.
350	**9 255 806**	**9 255 815**	**9 255 824**	200 ea.
400	**9 255 807**	**9 255 816**	**9 255 825**	200 ea.
450	**9 255 808**	**9 255 817**	**9 255 826**	200 ea.
500	**9 255 809**	**9 255 818**	**9 255 827**	200 ea.
550	**9 255 810**	**9 255 819**	**9 255 828**	200 ea.
600	**9 255 811**	**9 255 820**	**9 255 829**	200 ea.
650	**9 255 812**	**9 255 821**	**9 255 830**	200 ea.

3 A Drawer front connector for drawer side profile, height 101 mm

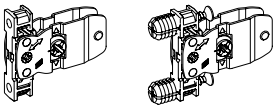

- For screwing on or knocking in
- Steel, plastic

Mounting option	Order no.	PU
for screwing on	**9 255 835**	200 ea.
for knocking in	**9 255 836**	200 ea.

5 Rear panel stabiliser

- For wooden and aluminium rear panels
- 1 for cabinet body width ≥ 600 mm; 2 each ≥ 800 mm; 3 each = 1200 mm
- Plastic

Order no.	PU
9 257 702	1/200 ea.

Advice

- Front options for interior drawer / pot-and-pan drawer 32 - 37
- Rear panel options 38 - 41
- Design options 42 - 51
- Illumination 52 - 53
- Accessories 57 - 59
- Actro YOU / Quadro YOU drawer runners 60 - 69
- Push to open Silent 62 - 67

hettich.com/short/5e5af6

AvanTech YOU double walled drawer system

- **Drawer height 139 mm**
- **Powder coated steel, silver / white / anthracite**

Planning / installation dimensions

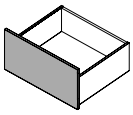

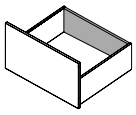

* All dimensions identical for Actro YOU and Quadro YOU

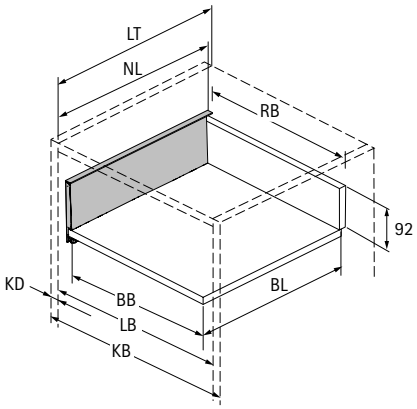

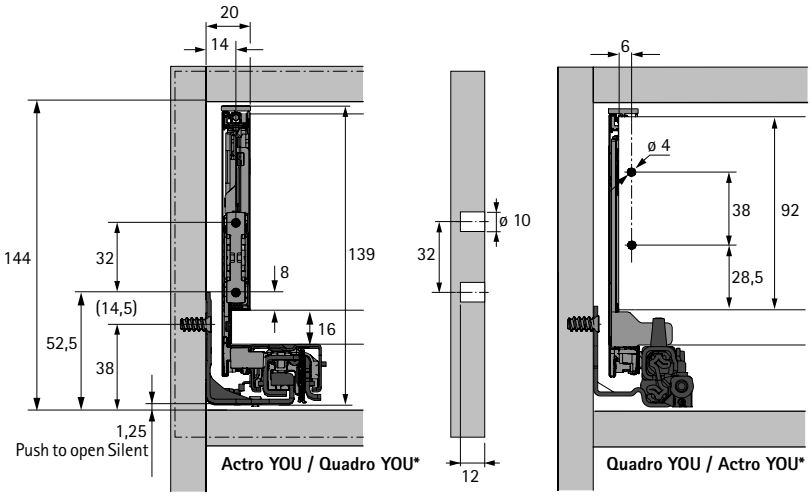

BB Bottom panel width	KB Cabinet body width	NL Nominal length	LB Clear inside width
BL Bottom panel length	RB Rear panel width	KD Cabinet body side thicknesses	LT Clear inside depth

Dimension		mm
BL		NL - 21
BB		LB - 24
RB		LB - 24
LT		NL + 3
LT	Internal drawer / internal pot-and-pan drawer	NL + 12
LT	Internal drawer / internal pot-and-pan drawer Push to open Push to open Silent	NL + 21

Positions for attaching Actro YOU / Quadro YOU drawer runner

Nominal length mm	Hole spacing b1 mm	b2 mm**
270	160	
300	160	
350	224	
400	224	
450	256	288
500	256	320
550	256	320
600	256	320
650*	256	416

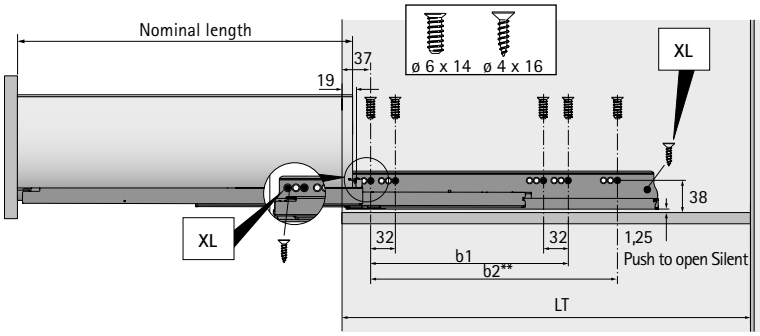

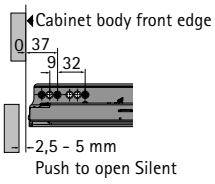

* Nominal length 650 mm only for Actro YOU XL
** Hole spacing b2 only for Actro YOU XL

AvanTech YOU double walled drawer system

- **Drawer height 139 mm**
- **Powder coated steel, silver / white / anthracite**

1 A Drawer side profile set, height 139 mm

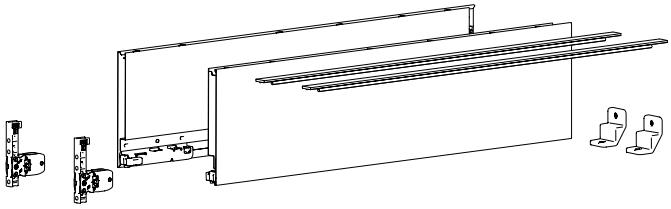

- Integrated vertical, lateral and tilt adjustment
- Powder coated steel

Set comprises:
- 1 drawer side profile, left and right
- 2 design profiles in drawer side profile colour
- 2 drawer front connectors for screwing on
- 2 rear panel stabilisers
- Fixing material

Nominal length mm	Order no. / Colour			PU
	silver	white	anthracite	
270	9 255 253	9 255 293	9 255 333	1 set
300	9 255 254	9 255 294	9 255 334	1 set
350	9 255 255	9 255 295	9 255 335	1 set
400	9 255 256	9 255 296	9 255 336	1 set
450	9 255 257	9 255 297	9 255 337	1 set
500	9 255 258	9 255 298	9 255 338	1 set
550	9 255 259	9 255 299	9 255 339	1 set
600	9 255 260	9 255 300	9 255 340	1 set
650	9 255 261	9 255 301	9 255 341	1 set

1 A Drawer side profile, height 139 mm

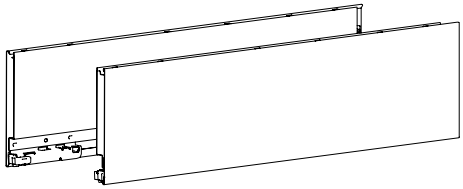

- Integrated vertical, lateral and tilt adjustment
- Powder coated steel

- 2 A / B / C Design profile must be ordered separately
- 3 A Drawer front connector must be ordered separately
- 5 Rear panel stabilizer must be ordered separately

Nominal length mm	Order no. / Colour / Mounting side						PU
	silver		white		anthracite		
	left	right	left	right	left	right	
270	9 255 026	9 255 027	9 255 106	9 255 107	9 255 186	9 255 187	20 ea.
300	9 255 028	9 255 029	9 255 108	9 255 109	9 255 188	9 255 189	20 ea.
350	9 255 030	9 255 031	9 255 110	9 255 111	9 255 190	9 255 191	20 ea.
400	9 255 032	9 255 033	9 255 112	9 255 113	9 255 192	9 255 193	20 ea.
450	9 255 034	9 255 035	9 255 114	9 255 115	9 255 194	9 255 195	20 ea.
500	9 255 036	9 255 037	9 255 116	9 255 117	9 255 196	9 255 197	20 ea.
550	9 255 038	9 255 039	9 255 118	9 255 119	9 255 198	9 255 199	20 ea.
600	9 255 040	9 255 041	9 255 120	9 255 121	9 255 200	9 255 201	20 ea.
650	9 255 042	9 255 043	9 255 122	9 255 123	9 255 202	9 255 203	20 ea.

Advice

- Front options for interior drawer / pot-and-pan drawer 32 - 37
- Rear panel options 38 - 41
- Design options 42 - 51
- Illumination 52 - 53
- Accessories 57 - 59
- Actro YOU / Quadro YOU drawer runners 60 - 69
- Push to open Silent 62 - 67

hettich.com/short/614d98

2 A Design profile in drawer side profile colour

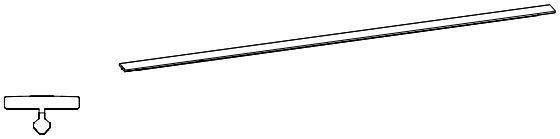

- Any chosen top edge for drawer side profile
- For clipping on
- Plastic, solid coloured

Nominal length mm	Order no. / Colour			PU
	silver	white	anthracite	
270	**9 255 804**	**9 255 813**	**9 255 822**	200 ea.
300	**9 255 805**	**9 255 814**	**9 255 823**	200 ea.
350	**9 255 806**	**9 255 815**	**9 255 824**	200 ea.
400	**9 255 807**	**9 255 816**	**9 255 825**	200 ea.
450	**9 255 808**	**9 255 817**	**9 255 826**	200 ea.
500	**9 255 809**	**9 255 818**	**9 255 827**	200 ea.
550	**9 255 810**	**9 255 819**	**9 255 828**	200 ea.
600	**9 255 811**	**9 255 820**	**9 255 829**	200 ea.
650	**9 255 812**	**9 255 821**	**9 255 830**	200 ea.

3 A Drawer front connector for drawer side profile, height 139 mm

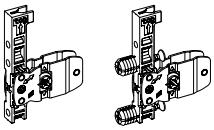

- For screwing on or knocking in
- Steel, plastic

Mounting option	Order no.	PU
for screwing on	**9 257 884**	200 ea.
for knocking in	**9 257 885**	200 ea.

5 Rear panel stabiliser

- For wooden and aluminium rear panels
- 1 for cabinet body width ≥ 600 mm; 2 each ≥ 800 mm; 3 each = 1200 mm
- Plastic

Order no.	PU
9 257 702	1/200 ea.

Advice

- Front options for interior drawer / pot-and-pan drawer 32 - 37
- Rear panel options 38 - 41
- Design options 42 - 51
- Illumination 52 - 53
- Accessories 57 - 59
- Actro YOU / Quadro YOU drawer runners 60 - 69
- Push to open Silent 62 - 67

hettich.com/short/614d98

AvanTech YOU double walled drawer system

- **Pot-and-pan drawer, height 187 mm**
- **Powder coated steel, silver / white / anthracite**

Planning / installation dimensions

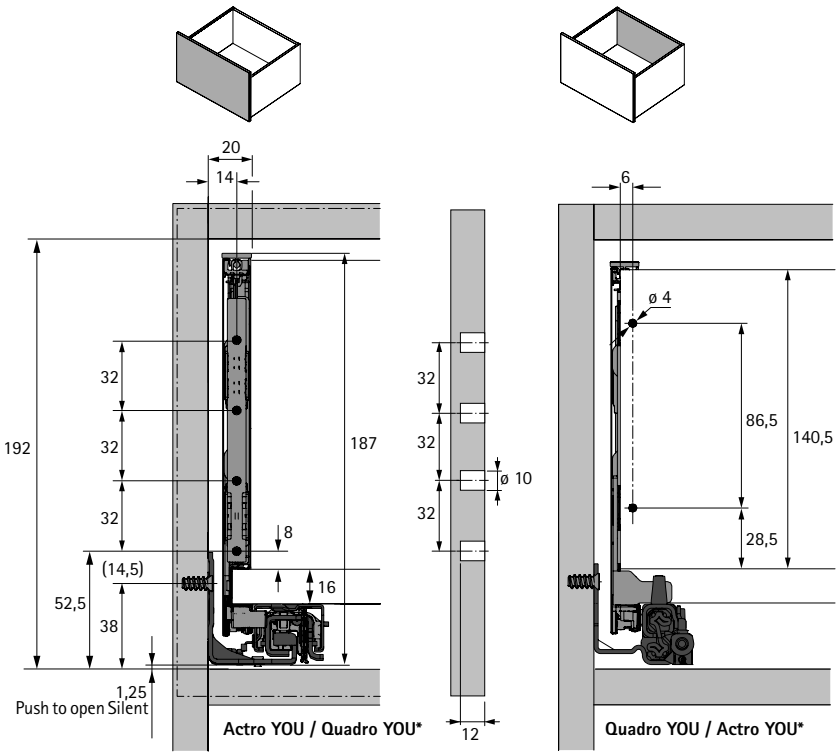

* All dimensions identical for Actro YOU and Quadro YOU

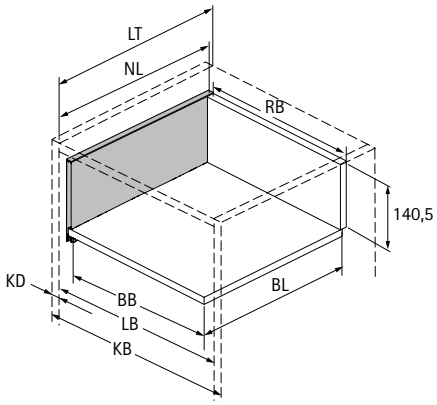

BB Bottom panel width	KB Cabinet body width	NL Nominal length	LB Clear inside width
BL Bottom panel length	RB Rear panel width	KD Cabinet body side thicknesses	LT Clear inside depth

Dimension		mm
BL		NL - 21
BB		LB - 24
RB		LB - 24
LT		NL + 3
LT	Internal drawer / internal pot-and-pan drawer	NL + 12
LT	Internal drawer / internal pot-and-pan drawer Push to open Push to open Silent	NL + 21

Positions for attaching Actro YOU / Quadro YOU drawer runner

Nominal length mm	Hole spacing b1 mm	b2 mm**
270	160	
300	160	
350	224	
400	224	
450	256	288
500	256	320
550	256	320
600	256	320
650*	256	416

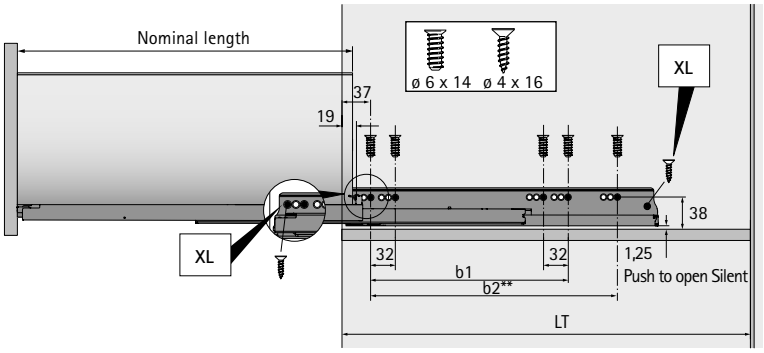

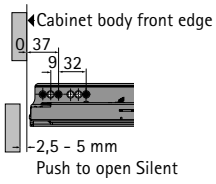

* Nominal length 650 mm only for Actro YOU XL
** Hole spacing b2 only for Actro YOU XL

AvanTech YOU double walled drawer system

- **Pot-and-pan drawer, height 187 mm**
- **Powder coated steel, silver / white / anthracite**

1 A Drawer side profile set, height 187 mm

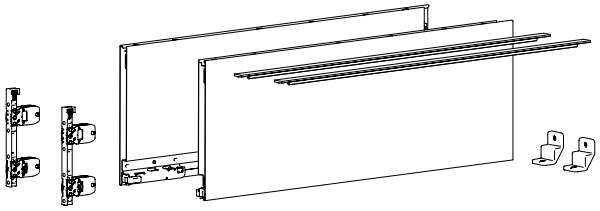

- Integrated vertical, lateral and tilt adjustment
- Powder coated steel

Set comprises:
- 1 drawer side profile, left and right
- 2 design profiles in drawer side profile colour
- 2 drawer front connectors for screwing on
- 2 rear panel stabilisers
- Fixing material

Nominal length mm	Order no. / Colour			PU
	silver	white	anthracite	
270	9 255 262	9 255 302	9 255 342	1 set
300	9 255 263	9 255 303	9 255 343	1 set
350	9 255 264	9 255 304	9 255 344	1 set
400	9 255 265	9 255 305	9 255 345	1 set
450	9 255 266	9 255 306	9 255 346	1 set
500	9 255 267	9 255 307	9 255 347	1 set
550	9 255 268	9 255 308	9 255 348	1 set
600	9 255 269	9 255 309	9 255 349	1 set
650	9 255 270	9 255 310	9 255 350	1 set

1 A Drawer side profile, height 187 mm

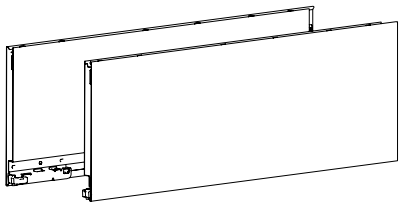

- Integrated vertical, lateral and tilt adjustment
- Powder coated steel

- 2 A / B / C Design profile must be ordered separately
- 3 A Drawer front connector must be ordered separately
- 12 DesignCape can be ordered separately
- 5 Rear panel stabilizer must be ordered separately

Nominal length mm	Order no. / Colour / Mounting side						PU
	silver		white		anthracite		
	left	right	left	right	left	right	
270	9 255 044	9 255 045	9 255 124	9 255 125	9 255 204	9 255 205	10 ea.
300	9 255 046	9 255 047	9 255 126	9 255 127	9 255 206	9 255 207	10 ea.
350	9 255 048	9 255 049	9 255 128	9 255 129	9 255 208	9 255 209	10 ea.
400	9 255 050	9 255 051	9 255 130	9 255 131	9 255 210	9 255 211	10 ea.
450	9 255 052	9 255 053	9 255 132	9 255 133	9 255 212	9 255 213	10 ea.
500	9 255 054	9 255 055	9 255 134	9 255 135	9 255 214	9 255 215	10 ea.
550	9 255 056	9 255 057	9 255 136	9 255 137	9 255 216	9 255 217	10 ea.
600	9 255 058	9 255 059	9 255 138	9 255 139	9 255 218	9 255 219	10 ea.
650	9 255 060	9 255 061	9 255 140	9 255 141	9 255 220	9 255 221	10 ea.

Advice

- Front options for interior drawer / pot-and-pan drawer 32 - 37
- Rear panel options 38 - 41
- Design options 42 - 51
- Illumination 52 - 53
- Accessories 57 - 59
- Actro YOU / Quadro YOU drawer runners 60 - 69
- Push to open Silent 62 - 67

hettich.com/short/da22c2

2 A Design profile in drawer side profile colour

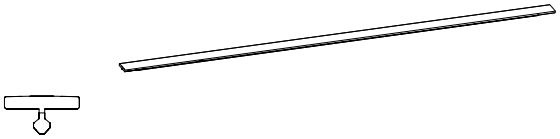

- Any chosen top edge for drawer side profile
- For clipping on
- Plastic, solid coloured

Nominal length mm	Order no. / Colour			PU
	silver	white	anthracite	
270	**9 255 804**	**9 255 813**	**9 255 822**	200 ea.
300	**9 255 805**	**9 255 814**	**9 255 823**	200 ea.
350	**9 255 806**	**9 255 815**	**9 255 824**	200 ea.
400	**9 255 807**	**9 255 816**	**9 255 825**	200 ea.
450	**9 255 808**	**9 255 817**	**9 255 826**	200 ea.
500	**9 255 809**	**9 255 818**	**9 255 827**	200 ea.
550	**9 255 810**	**9 255 819**	**9 255 828**	200 ea.
600	**9 255 811**	**9 255 820**	**9 255 829**	200 ea.
650	**9 255 812**	**9 255 821**	**9 255 830**	200 ea.

3 A Drawer front connector for drawer side profile, height 187 / 251 mm

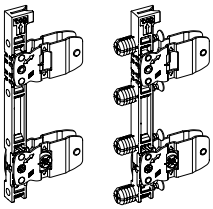

- For screwing on or knocking in
- Steel, plastic

Mounting option	Order no.	PU
for screwing on	**9 255 838**	200 ea.
for knocking in	**9 255 839**	200 ea.

5 Rear panel stabiliser

- For wooden and aluminium rear panels
- 1 for cabinet body width ≥ 600 mm; 2 each ≥ 800 mm; 3 each = 1200 mm
- Plastic

Order no.	PU
9 257 702	1/200 ea.

Advice

- Front options for interior drawer / pot-and-pan drawer 32 - 37
- Rear panel options 38 - 41
- Design options 42 - 51
- Illumination 52 - 53
- Accessories 57 - 59
- Actro YOU / Quadro YOU drawer runners 60 - 69
- Push to open Silent 62 - 67

hettich.com/short/da22c2

AvanTech YOU double walled drawer system

- **Pot-and-pan drawer, height 251 mm**
- **Powder coated steel, silver / white / anthracite**

Planning / installation dimensions

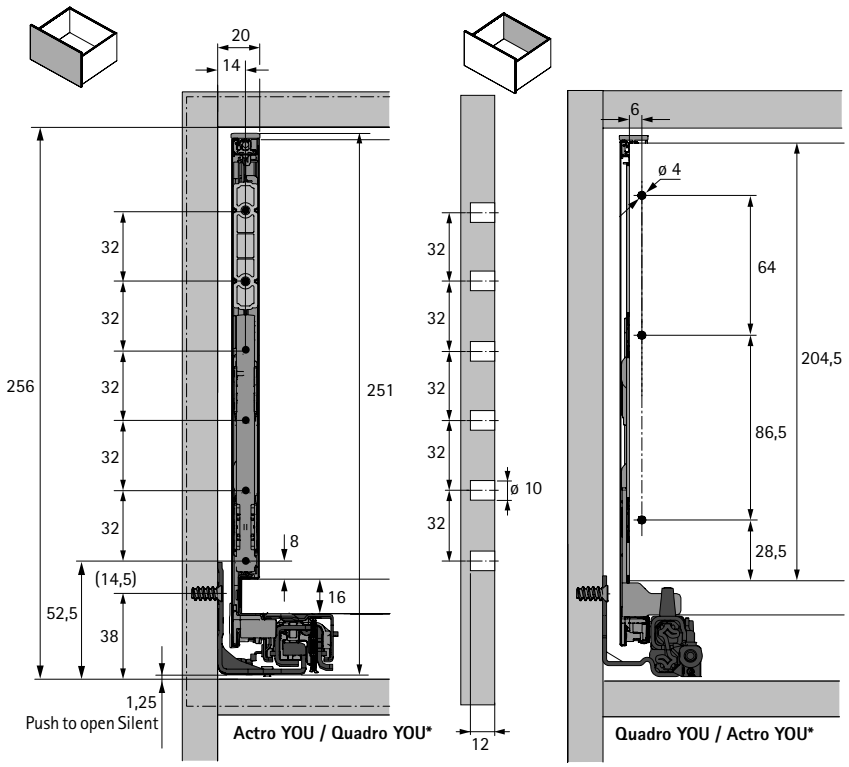

* All dimensions identical for Actro YOU and Quadro YOU

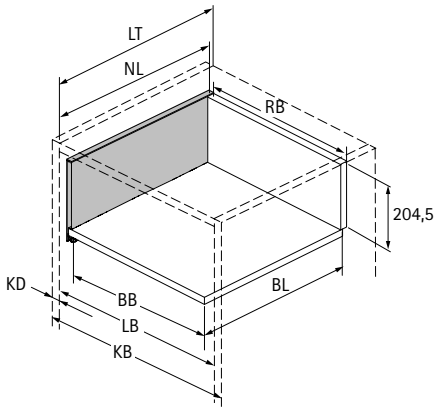

BB Bottom panel width	KB Cabinet body width	NL Nominal length	LB Clear inside width
BL Bottom panel length	RB Rear panel width	KD Cabinet body side thicknesses	LT Clear inside depth

Dimension	mm
BL	NL - 21
BB	LB - 24
RB	LB - 24
LT	NL + 3

Positions for attaching Actro YOU / Quadro YOU drawer runner

Nominal length mm	Hole spacing b1 mm	b2 mm**
350	224	
400	224	
450	256	288
500	256	320
550	256	320
600	256	320
650*	256	416

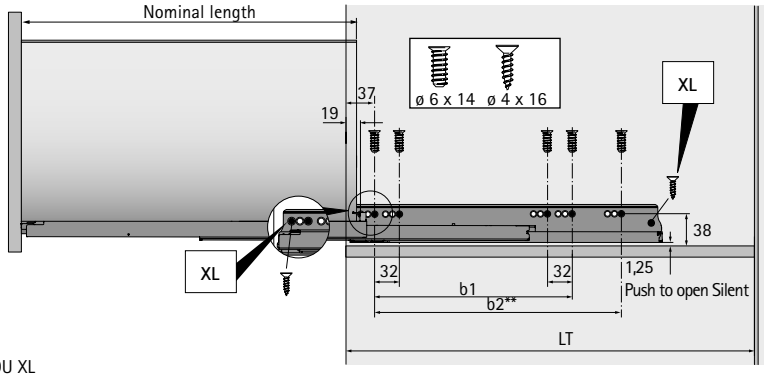

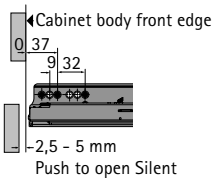

* Nominal length 650 mm only for Actro YOU XL
** Hole spacing b2 only for Actro YOU XL

AvanTech YOU double walled drawer system

- **Pot-and-pan drawer, height 251 mm**
- **Powder coated steel, silver / white / anthracite**

1 A Drawer side profile set, height 251 mm

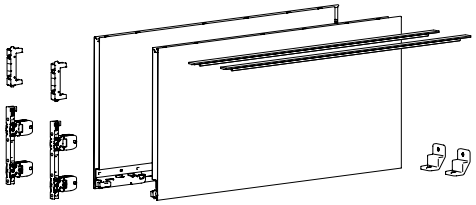

- Integrated vertical, lateral and tilt adjustment
- Powder coated steel

Set comprises:
- 1 drawer side profile, left and right
- 2 Design profiles in drawer side profile colour
- 2 drawer front connectors for screwing on
- 2 screw on stabilisers for 251 mm height
- 2 rear panel stabilisers
- Fixing material

Nominal length mm	Order no. / Colour			PU
	silver	white	anthracite	
350	9 255 273	9 255 313	9 255 353	1 set
400	9 255 274	9 255 314	9 255 354	1 set
450	9 255 275	9 255 315	9 255 355	1 set
500	9 255 276	9 255 316	9 255 356	1 set
550	9 255 277	9 255 317	9 255 357	1 set
600	9 255 278	9 255 318	9 255 358	1 set
650	9 255 279	9 255 319	9 255 359	1 set

1 A Drawer side profile, height 251 mm

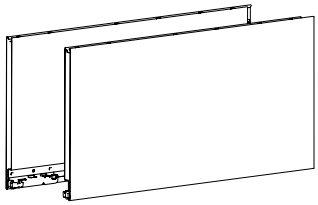

- Integrated vertical, lateral and tilt adjustment
- Powder coated steel

- 2 A / B / C Design profile must be ordered separately
- 3 A Drawer front connector must be ordered separately
- 5 Rear panel stabilizer must be ordered separately

Nominal length mm	Order no. / Colour / Mounting side						PU
	silver		white		anthracite		
	left	right	left	right	left	right	
300	9 255 064	9 255 065	9 255 144	9 255 145	9 255 224	9 255 225	10 ea.
350	9 255 066	9 255 067	9 255 146	9 255 147	9 255 226	9 255 227	10 ea.
400	9 255 068	9 255 069	9 255 148	9 255 149	9 255 228	9 255 229	10 ea.
450	9 255 070	9 255 071	9 255 150	9 255 151	9 255 230	9 255 231	10 ea.
500	9 255 072	9 255 073	9 255 152	9 255 153	9 255 232	9 255 233	10 ea.
550	9 255 074	9 255 075	9 255 154	9 255 155	9 255 234	9 255 235	10 ea.
600	9 255 076	9 255 077	9 255 156	9 255 157	9 255 236	9 255 237	10 ea.
650	9 255 078	9 255 079	9 255 158	9 255 159	9 255 238	9 255 239	10 ea.

Advice

- Rear panel options 38 - 41
- Design options 42 - 51
- Illumination 52 - 53
- Accessories 57 - 59
- Actro YOU / Quadro YOU drawer runners 60 - 69
- Push to open Silent 62 - 67

hettich.com/short/9874cb

2 A Design profile in drawer side profile colour

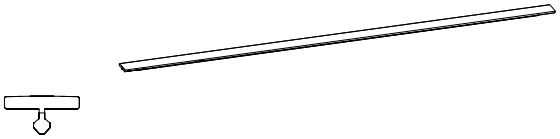

- Any chosen top edge for drawer side profile
- For clipping on
- Plastic, solid coloured

Nominal length mm	Order no. / Colour			PU
	silver	white	anthracite	
350	**9 255 806**	**9 255 815**	**9 255 824**	200 ea.
400	**9 255 807**	**9 255 816**	**9 255 825**	200 ea.
450	**9 255 808**	**9 255 817**	**9 255 826**	200 ea.
500	**9 255 809**	**9 255 818**	**9 255 827**	200 ea.
550	**9 255 810**	**9 255 819**	**9 255 828**	200 ea.
600	**9 255 811**	**9 255 820**	**9 255 829**	200 ea.
650	**9 255 812**	**9 255 821**	**9 255 830**	200 ea.

3 A Drawer front connector for drawer side profile, height 187 / 251 mm

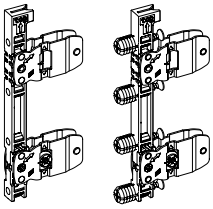

- For screwing on or knocking in
- Steel, plastic

Mounting option	Order no.	PU
for screwing on	**9 255 838**	200 ea.
for knocking in	**9 255 839**	200 ea.

3 C Drawer front connector stabiliser, height 251 mm

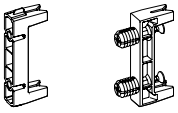

- For screwing on or knocking in
- Steel, plastic

Mounting option	Order no.	PU
for screwing on	**9 257 887**	200 ea.
for knocking in	**9 257 888**	200 ea.

5 Rear panel stabiliser

- For wooden and aluminium rear panels
- 1 for cabinet body width ≥ 600 mm; 2 each ≥ 800 mm; 3 each = 1200 mm
- Plastic

Order no.	PU
9 257 702	1/200 ea.

Advice

- Rear panel options 38 - 41
- Design options 42 - 51
- Illumination 52 - 53
- Accessories 57 - 59
- Actro YOU / Quadro YOU drawer runners 60 - 69
- Push to open Silent 62 - 67

hettich.com/short/9874cb

AvanTech YOU double walled drawer system

- **Inlay pot-and-pan drawer, height 187 mm**
- **Powder coated steel, silver / white / anthracite**

- For combining with glass inlay or any chosen material
- For using materials in a thickness of 10 mm (for 8 mm thick materials see additional adapter)
- Integrated vertical, lateral and tilt adjustment
- Steel, powder coated

Planning / installation dimensions

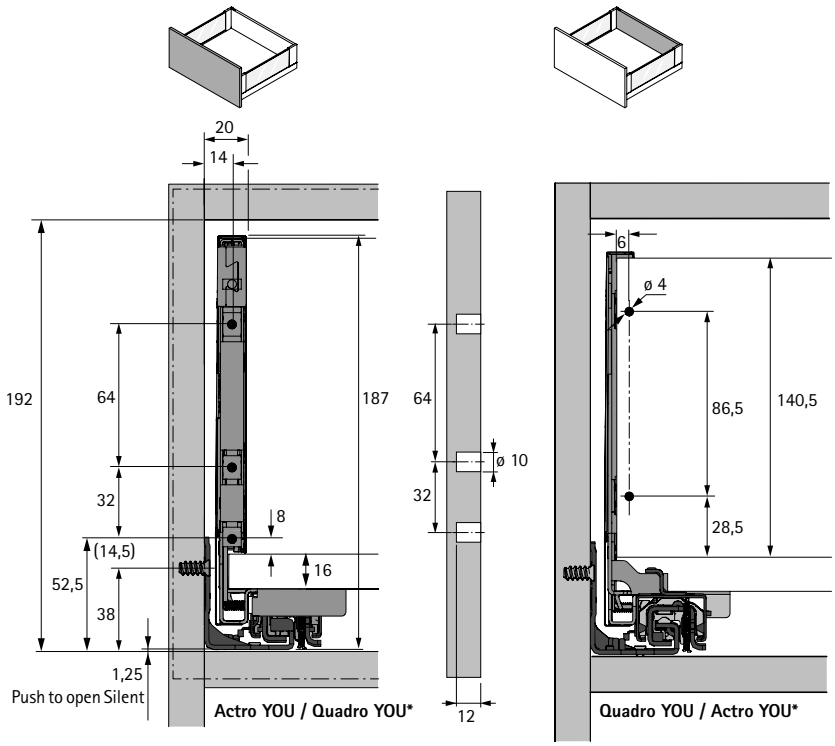

* All dimensions identical for Actro YOU and Quadro YOU

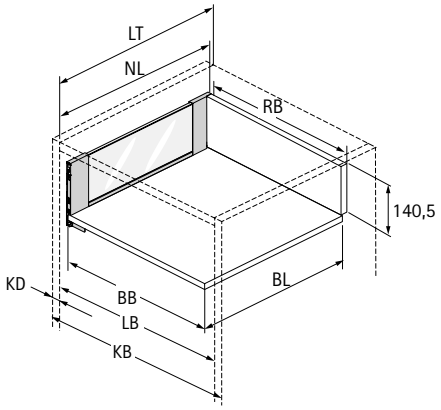

BB Bottom panel width	KB Cabinet body width	NL Nominal length	LB Clear inside width
BL Bottom panel length	RB Rear panel width	KD Cabinet body side thicknesses	LT Clear inside depth

Dimension		mm
BL		NL - 21
BB		LB - 24
RB		LB - 24
LT		NL + 3
LT	Internal drawer / internal pot-and-pan drawer	NL + 12
LT	Internal drawer / internal pot-and-pan drawer Push to open Push to open Silent	NL + 21

Positions for attaching Actro YOU / Quadro YOU drawer runner

Nominal length mm	Hole spacing b1 mm	b2 mm**
350	224	
400	224	
450	256	288
500	256	320
550	256	320
600	256	320
650*	256	416

* Nominal length 650 mm only for Actro YOU XL
** Hole spacing b2 only for Actro YOU XL

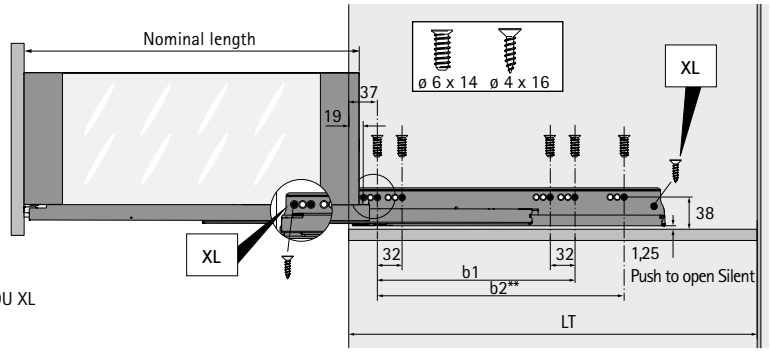

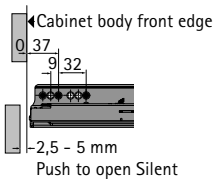

AvanTech YOU double walled drawer system

- **Inlay pot-and-pan drawer, height 187 mm**
- **Powder coated steel, silver / white / anthracite**

1 A Inlay drawer side profile set, height 187 mm

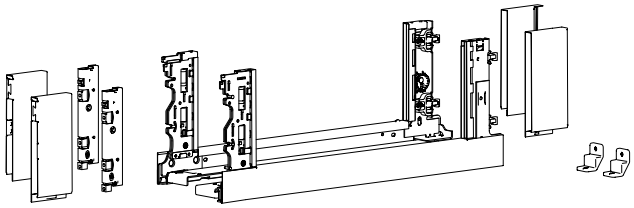

- For combining with glass inlay or any chosen material
- For using materials in a thickness of 10 mm (for 8 mm thick materials see additional adapter)
- Integrated vertical, lateral and tilt adjustment
- Steel, powder coated

Set comprises:
- 1 Inlay drawer side profile, left and right
- 1 cap, front, left and right
- 1 cap, rear, left and right
- 2 drawer front connectors for Inlay drawer side profile for screwing on
- 2 rear panel stabilisers
- Fixing material

Nominal length mm	Order no. / Colour			PU
	silver	white	anthracite	
350	9 257 173	9 257 180	9 257 187	1 set
400	9 257 174	9 257 181	9 257 188	1 set
450	9 257 175	9 257 182	9 257 189	1 set
500	9 257 176	9 257 183	9 257 190	1 set
550	9 257 177	9 257 184	9 257 191	1 set
600	9 257 178	9 257 185	9 257 192	1 set
650	9 257 179	9 257 186	9 257 193	1 set

1 B Inlay drawer side profile, height 187 mm

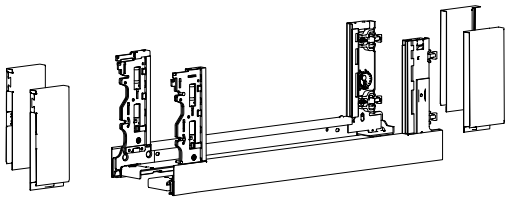

- For combining with glass inlay or any chosen material
- For using materials in a thickness of 10 mm (for 8 mm thick materials see additional adapter)
- Integrated vertical, lateral and tilt adjustment
- Steel, powder coated

- Includes cover caps for Inlay drawer side profile
- 3 B Drawer front connector must be ordered separately
- Glass insert or similar option must be ordered separately
- 5 Rear panel stabilizer must be ordered separately

Nominal length mm	Order no. / Colour / Mounting side						PU
	silver		white		anthracite		
	left	right	left	right	left	right	
350	9 257 131	9 257 132	9 257 145	9 257 146	9 257 159	9 257 160	10 ea.
400	9 257 133	9 257 134	9 257 147	9 257 148	9 257 161	9 257 162	10 ea.
450	9 257 135	9 257 136	9 257 149	9 257 150	9 257 163	9 257 164	10 ea.
500	9 257 137	9 257 138	9 257 151	9 257 152	9 257 165	9 257 166	10 ea.
550	9 257 139	9 257 140	9 257 153	9 257 154	9 257 167	9 257 168	10 ea.
600	9 257 141	9 257 142	9 257 155	9 257 156	9 257 169	9 257 170	10 ea.
650	9 257 143	9 257 144	9 257 157	9 257 158	9 257 171	9 257 172	10 ea.

Advice

- Rear panel options 38 - 41
- Internal front panel options 32 - 37
- Design options 42 - 51
- Illumination 52 - 53
- Technical accessories 57 - 59
- Actro YOU / Quadro YOU drawer runners 60 - 69
- Push to open Silent 62 - 67

hettich.com/short/0e02a7

- **Inlay pot-and-pan drawer, height 187 mm**
- **Powder coated steel, silver / white / anthracite**

3 B Drawer front connector for Inlay drawer side profile, height 187 mm

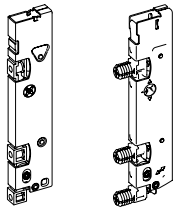

- For screwing on or knocking in
- Steel, plastic

Mounting option	Order no.	PU
for screwing on	**9 257 257**	100 ea.
for knocking in	**9 257 258**	100 ea.

5 Rear panel stabiliser

- For wooden and aluminium rear panels
- 1 for cabinet body width ≥ 600 mm; 2 each ≥ 800 mm; 3 each = 1200 mm
- Plastic

Order no.	PU
9 257 702	1/200 ea.

Inlay drawer side profile adapter for 8 mm material

- For using material in a thickness of 8 mm
- 2 adapters are required for each drawer side profile
- Transparent plastic

Order no.	PU
9 268 677	100 ea.

Planning / installation dimensions

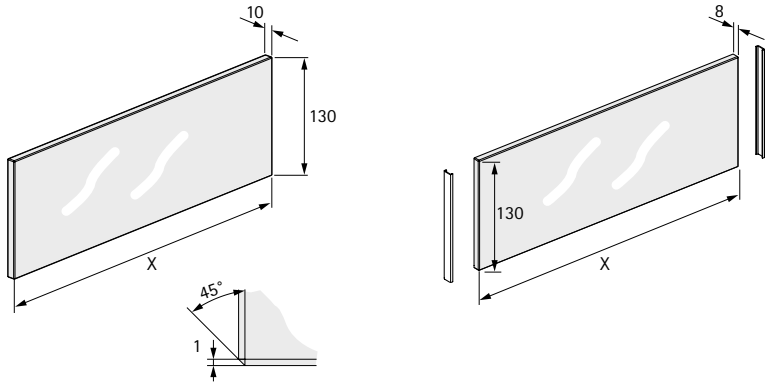

	10 mm	8 mm
NL mm	**X mm**	**X mm**
350	227	225
400	277	275
450	327	325
500	377	375
550	427	425
600	477	475
650	527	525

Advice

- Rear panel options 38 - 41
- Internal front panel options 32 - 37
- Design options 42 - 51
- Illumination 52 - 53
- Technical accessories 57 - 59
- Actro YOU / Quadro YOU drawer runners 60 - 69
- Push to open Silent 62 - 67

hettich.com/short/0e02a7

- **Front panel options**
- **Front panel in aluminium for internal drawer / internal pot-and-pan drawer, in heights of 101, 139, 187 mm**

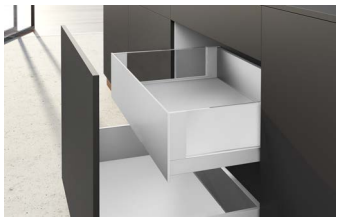

6 A Internal front panel, profile for cutting to length

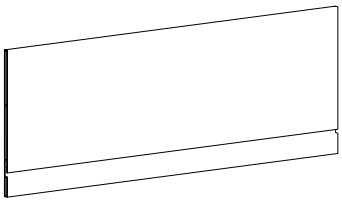

- For variable and standard cabinet body widths
- Length 2000 mm
- Material thickness 6 mm
- Powder coated aluminium

- 6 B or 6 C Connector set must be ordered separately

Nominal height mm	Order no. / Colour			PU
	silver	white	anthracite	
101	9 257 269	9 257 273	9 257 277	1 ea.
139	9 257 270	9 257 274	9 257 278	1 ea.
187	9 257 271	9 257 275	9 257 279	1 ea.

6 B Connector set for internal front panel for cutting to length, for use with drawer side profile

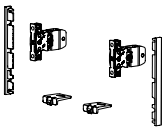

- For framing and connecting drawer side profile
- Steel, plastic
- For combining with 6 A internal front for cutting to length

Set comprises:
- 2 front connectors for drawer side profile
- 2 end caps
- 2 stabilisers for internal front panel
- Fixing material

Nominal height mm	Order no. / Colour			PU
	silver	white	anthracite	
101	9 257 611	9 257 615	9 257 619	1 set
139	9 257 612	9 257 616	9 257 620	1 set
187	9 257 613	9 257 617	9 257 621	1 set

6 C Connector set for internal front panel for cutting to length, for use with Inlay drawer side profile

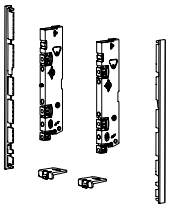

- For framing and connecting drawer side profile
- Steel, plastic
- For combining with 6 A internal front for cutting to length

Set comprises:
- 2 screw in front connectors for Inlay drawer side profile
- 2 end caps
- 2 stabilisers for internal front panel
- Fixing material

Nominal height mm	Order no. / Colour			PU
	silver	white	anthracite	
187	9 257 623	9 257 625	9 257 627	1 set

3 A Drawer front connector for drawer side profile, height 101 mm

- for screwing on
- Steel, plastic

Mounting option	Order no.	PU
for screwing on	9 255 835	200 ea.

3 A Drawer front connector for drawer side profile, height 139 mm

- for screwing on
- Steel, plastic

Mounting option	Order no.	PU
for screwing on	9 257 884	200 ea.

3 A Drawer front connector for drawer side profile, height 187 / 251 mm

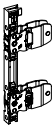

- for screwing on
- Steel, plastic

Mounting option	Order no.	PU
for screwing on	9 255 838	200 ea.

3 B Drawer front connector for Inlay drawer side profile, height 187 mm

- for screwing on
- Steel, plastic

Mounting option	Order no.	PU
for screwing on	9 257 257	100 ea.

4 B Stabiliser for internal front panel

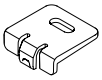

- For stabilising wide internal front panels
- Recommended for cabinet body widths > 600 mm and over
- Plastic

Order no.	PU
9 257 641	100 ea.

End caps

- Side edge for internal front panel profile
- Plastic

Nominal height mm	Order no. / Colour			PU
	silver	white	anthracite	
101	9 257 629	9 257 633	9 257 637	200 ea.
139	9 257 630	9 257 634	9 257 638	200 ea.
187	9 257 631	9 257 635	9 257 639	200 ea.

catch for internal front panel

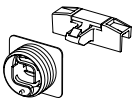

- For pressing in / clipping on
- Plastic

Set comprises:
- 1 catch
- 1 housing for catch
- Fixing material

Order no. / Colour			PU
silver	white	anthracite	
9 257 734	9 257 735	9 257 736	1 set

Advice

- AvanTech YOU drawer 8 - 18
- AvanTech YOU pot-and-pan drawer 20 - 26
- AvanTech YOU Inlay pot-and-pan drawer 28 - 30
- Rear panel options 38 - 41
- Design options / Illumination / Accessories 42 - 59
- Actro YOU / Quadro YOU drawer runners / Push to open Silent 60 - 67

hettich.com/short/9c1fe2

6 D Front panel for internal drawer

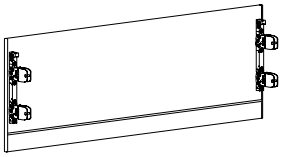

- Preassembled for standard cabinet body widths
- With premounted drawer front connectors and end caps
- Powder coated aluminium

Internal Front panel, height 101 mm, cab side 18 mm

Nominal length mm	Order no. / Colour			PU
	silver	white	anthracite	
300	9 257 368	9 257 377	9 257 386	10 ea.
400	9 257 369	9 257 378	9 257 387	10 ea.
450	9 257 370	9 257 379	9 257 388	10 ea.
500	9 257 371	9 257 380	9 257 389	10 ea.
600	9 257 372	9 257 381	9 257 390	10 ea.
800	9 257 373	9 257 382	9 257 391	10 ea.
900	9 257 374	9 257 383	9 257 392	10 ea.
1000	9 257 375	9 257 384	9 257 393	10 ea.
1200	9 257 376	9 257 385	9 257 394	10 ea.

Internal Front panel, height 139 mm, cab side 18 mm

Nominal length mm	Order no. / Colour			PU
	silver	white	anthracite	
300	9 257 395	9 257 404	9 257 413	10 ea.
400	9 257 396	9 257 405	9 257 414	10 ea.
450	9 257 397	9 257 406	9 257 415	10 ea.
500	9 257 398	9 257 407	9 257 416	10 ea.
600	9 257 399	9 257 408	9 257 417	10 ea.
800	9 257 400	9 257 409	9 257 418	10 ea.
900	9 257 401	9 257 410	9 257 419	10 ea.
1000	9 257 402	9 257 411	9 257 420	10 ea.
1200	9 257 403	9 257 412	9 257 421	10 ea.

Internal Front panel, height 187 mm, cab side 18 mm

Nominal length mm	Order no. / Colour			PU
	silver	white	anthracite	
300	9 257 422	9 257 431	9 257 440	10 ea.
400	9 257 423	9 257 432	9 257 441	10 ea.
450	9 257 424	9 257 433	9 257 442	10 ea.
500	9 257 425	9 257 434	9 257 443	10 ea.
600	9 257 426	9 257 435	9 257 444	10 ea.
800	9 257 427	9 257 436	9 257 445	10 ea.
900	9 257 428	9 257 437	9 257 446	10 ea.
1000	9 257 429	9 257 438	9 257 447	10 ea.
1200	9 257 430	9 257 439	9 257 448	10 ea.

- **Front panel options**
- **Front panel for internal drawer**

Planning / installation dimensions

Nominal length mm	Hole spacing b1 mm	b2 mm**
270	160	
300	160	
350	224	
400	224	
450	256	288
500	256	320
550	256	320
600	256	320
650*	256	416

* Nominal length 650 mm only for Actro YOU XL
** Hole spacing b2 only for Actro YOU XL

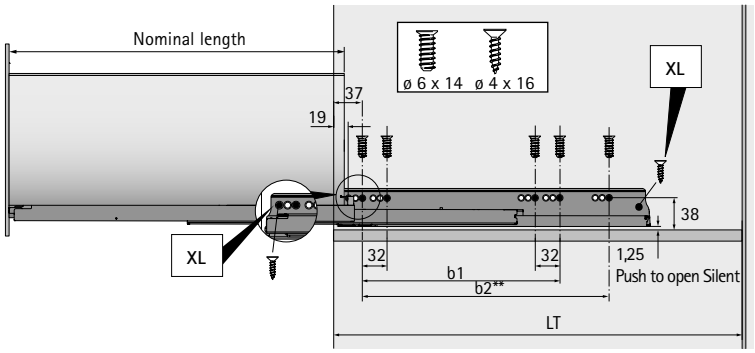

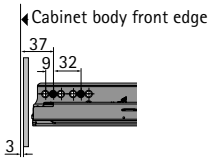

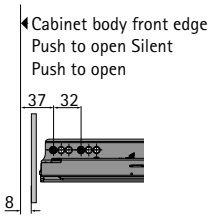

- **Front panel options**
- **Customisable front panel for internal pot-and-pan drawer, in height of 187 mm**

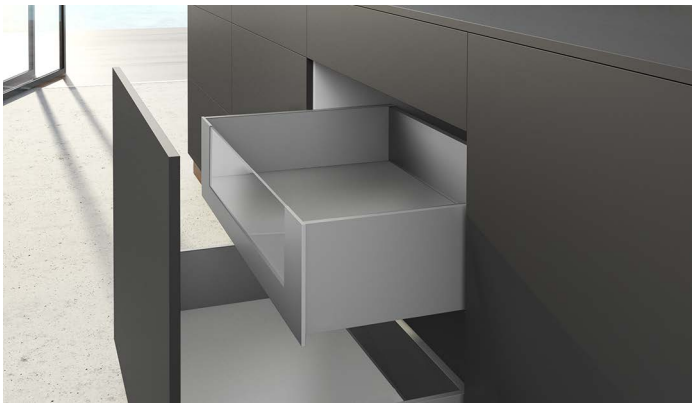

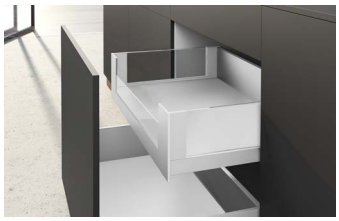

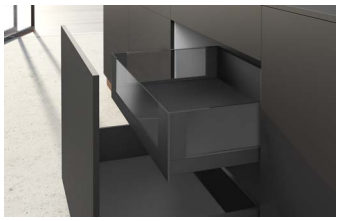

7 A Support profile for customisable internal front panel

- For holding 10 mm glass inlay or any chosen material
- For variable or standard cabinet body widths
- Length 2000 mm
- Powder coated aluminium

- 7 B or 7 C Connector for customisable front panel must be ordered separately

Nominal height mm	Order no. / Colour			PU
	silver	white	anthracite	
187	9 257 663	9 257 664	9 257 665	1 ea.

7 B Connector set for customisable internal front panel, for use with drawer side profile

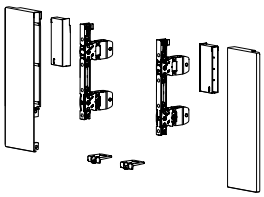

- For combining with 10 mm glass inlay or any chosen material
- Powder coated steel

- 7 A Support profile for customisable internal front panel must be ordered separately

Set comprises:
- 1 connector for customisable internal front panel, left and right
- 1 drawer front connectors for Inlay drawer side profile, left and right
- 2 spacer elements for low application
- 2 stabilisers for internal front panel
- Fixing material

Nominal height mm	Order no. / Colour			PU
	silver	white	anthracite	
187	9 257 651	9 257 652	9 257 653	1 set

7 C Connector set for customisable internal front panel, for use with Inlay drawer side profile

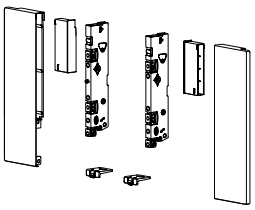

- For combining with 10 mm glass inlay or any chosen material
- Powder coated steel

- 7 A Support profile for customisable internal front panel must be ordered separately

Set comprises:
- 1 connector for customisable internal front panel, left and right
- 1 drawer front connectors for Inlay drawer side profile, left and right
- 2 spacer elements for low application
- 2 stabilisers for internal front panel
- Fixing material

Nominal height mm	Order no. / Colour			PU
	silver	white	anthracite	
187	9 257 657	9 257 658	9 257 659	1 set

- **Front panel options**
- **Customisable front panel for internal pot-and-pan drawer, in height of 187 mm**

Planning / installation dimensions

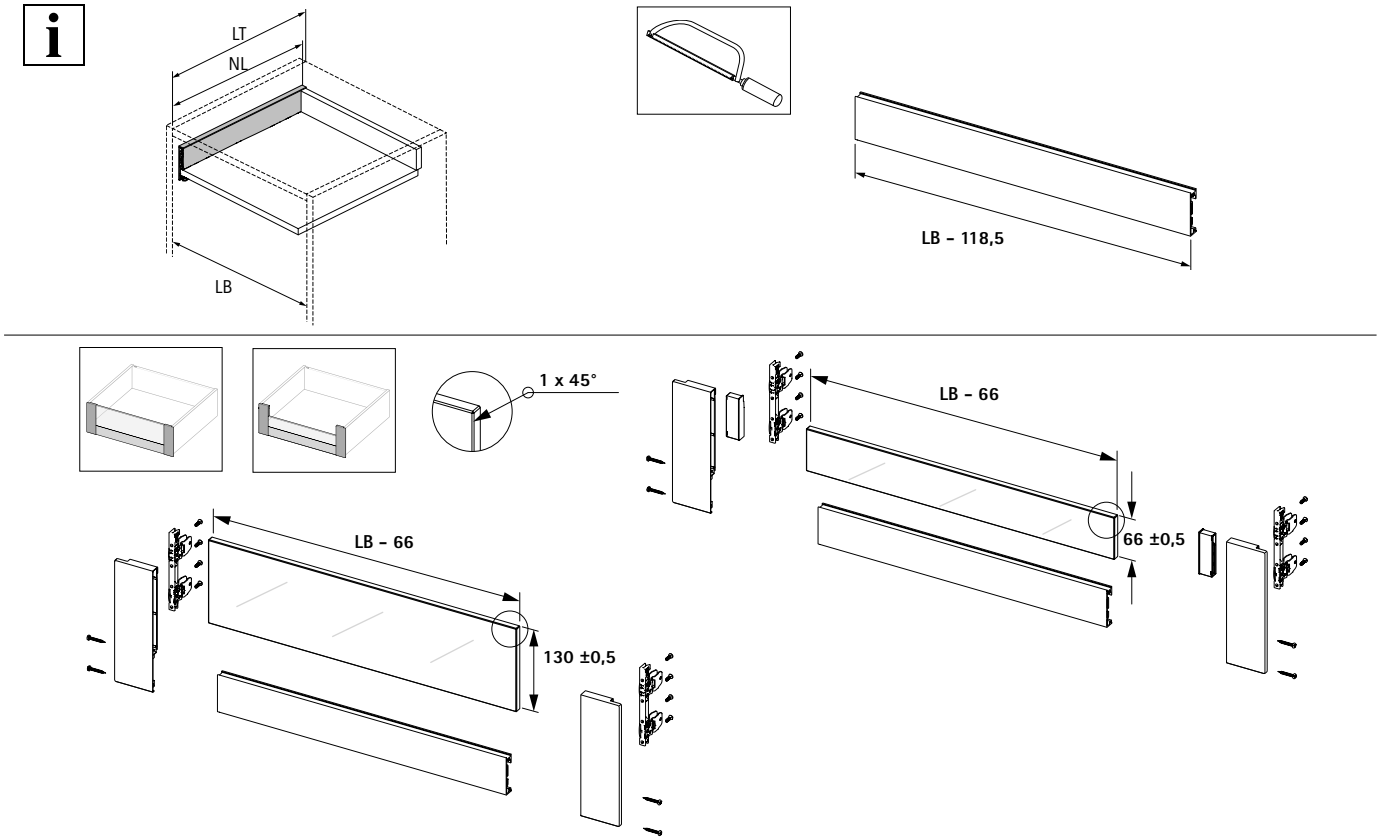

Positions for attaching Actro YOU / Quadro YOU drawer runner

Nominal length mm	Hole spacing b1 mm	b2 mm**
270	160	
300	160	
350	224	
400	224	
450	256	288
500	256	320
550	256	320
600	256	320
650*	256	416

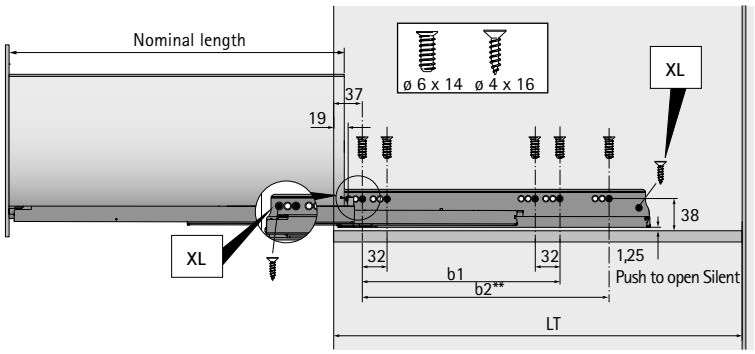

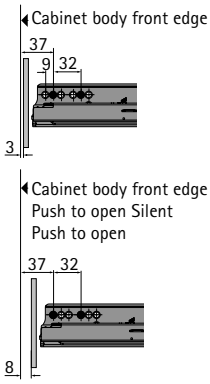

* Nominal length 650 mm only for Actro YOU XL
** Hole spacing b2 only for Actro YOU XL

Advice

- AvanTech YOU drawer 8 - 18
- AvanTech YOU pot-and-pan drawer 20 - 26
- AvanTech YOU Inlay pot-and-pan drawer 28 - 30
- Rear panel options 38 - 41
- Design options / Illumination / Accessories 42 - 59
- Actro YOU / Quadro YOU drawer runners / Push to open Silent 60 - 67

hettich.com/short/fe9274

As versatile as you are.
Customised wooden rear panels or aluminium rear panels powder coated in drawer side profile colour can be screwed directly to the drawer side profile without rear panel connectors.Steel rear panels simply clip onto the drawer side profile.

8 Connector for rear panel profile

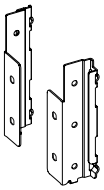

- Can be used by way of option for connecting customised rear panels or the rear panel profile for cutting to length
- Powder coated steel

Nominal height mm	Order no. / Colour / Mounting side						PU
	silver		white		anthracite		
	left	right	left	right	left	right	
101	9 257 666	9 257 667	9 257 678	9 257 679	9 257 690	9 257 691	20 ea.
139	9 257 668	9 257 669	9 257 680	9 257 681	9 257 692	9 257 693	20 ea.
187	9 257 670	9 257 671	9 257 682	9 257 683	9 257 694	9 257 695	20 ea.
251	9 257 672	9 257 673	9 257 684	9 257 685	9 257 696	9 257 697	20 ea.

9 Rear panel profile for cutting to length

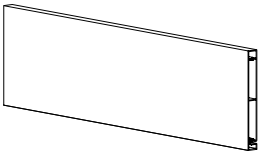

- For variable and standard cabinet body widths
- Length 2000 mm
- Powder coated aluminium

- 8 Rear panel connector can be ordered separately

Nominal height mm	Order no. / Colour			PU
	silver	white	anthracite	
101	9 257 300	9 257 305	9 257 310	1 ea.
139	9 257 301	9 257 306	9 257 311	1 ea.
187	9 257 302	9 257 307	9 257 312	1 ea.
251	9 257 303	9 257 308	9 257 313	1 ea.

Advice

- AvanTech YOU drawer 8 - 18
- AvanTech YOU pot-and-pan drawer 20 - 26
- AvanTech YOU Inlay pot-and-pan drawer 28 - 30
- Front options for interior drawer / pot-and-pan drawer 32 - 37
- Design options / Illumination / Accessories 42 - 59
- Actro YOU / Quadro YOU drawer runners / Push to open Silent 60 - 67

hettich.com/short/1e2dc5

10 Steel rear panel

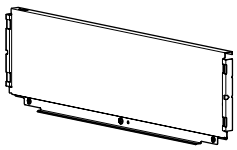

- For standard cabinet body widths
- Powder coated steel

Rear panel, height 77 mm, cab side 18 mm

Nominal length mm	Order no. / Colour			PU
	silver	white	anthracite	
600	9 270 570	9 270 623	9 270 676	10 ea.

Rear panel, height 101 mm, cab side 18 mm

Nominal length mm	Order no. / Colour			PU
	silver	white	anthracite	
300	9 270 572	9 270 625	9 270 678	10 ea.
400	9 270 574	9 270 627	9 270 680	10 ea.
450	9 270 575	9 270 628	9 270 681	10 ea.
500	9 270 576	9 270 629	9 270 682	10 ea.
600	9 270 578	9 270 631	9 270 684	10 ea.
700	9 270 579	9 270 632	9 270 685	10 ea.
800	9 270 580	9 270 633	9 270 686	10 ea.
900	9 270 581	9 270 634	9 270 687	10 ea.
1000	9 270 582	9 270 635	9 270 688	10 ea.
1200	9 270 583	9 270 636	9 270 689	10 ea.

Rear panel, height 139 mm, cab side 18 mm

Nominal length mm	Order no. / Colour			PU
	silver	white	anthracite	
300	9 270 585	9 270 637	9 270 691	10 ea.
400	9 270 587	9 270 638	9 270 693	10 ea.
450	9 270 588	9 270 639	9 270 694	10 ea.
500	9 270 589	9 270 640	9 270 695	10 ea.
600	9 270 591	9 270 641	9 270 697	10 ea.
700	9 270 592	9 270 642	9 270 698	10 ea.
800	9 270 593	9 270 643	9 270 699	10 ea.
900	9 270 594	9 270 644	9 270 700	10 ea.
1000	9 270 595	9 270 645	9 270 701	10 ea.
1200	9 270 596	9 270 646	9 270 702	10 ea.

Rear panel, height 187 mm, cab side 18 mm

Nominal length mm	Order no. / Colour			PU
	silver	white	anthracite	
300	9 270 598	9 270 651	9 270 704	10 ea.
400	9 270 600	9 270 653	9 270 706	10 ea.
450	9 270 601	9 270 654	9 270 707	10 ea.
500	9 270 602	9 270 605	9 270 708	10 ea.
600	9 270 604	9 270 655	9 270 710	10 ea.
700	9 270 605	9 270 657	9 270 711	10 ea.
800	9 270 606	9 270 659	9 270 712	10 ea.
900	9 270 607	9 270 660	9 270 713	10 ea.
1000	9 270 608	9 270 661	9 270 714	10 ea.
1200	9 270 609	9 270 662	9 270 715	10 ea.

Rear panel, height 251 mm, cab side 18 mm

Nominal length mm	Order no. / Colour			PU
	silver	white	anthracite	
300	9 270 611	9 270 665	9 270 717	10 ea.
400	9 270 613	9 270 666	9 270 719	10 ea.
450	9 270 614	9 270 667	9 270 720	10 ea.
500	9 270 615	9 270 668	9 270 721	10 ea.
600	9 270 617	9 270 670	9 270 723	10 ea.
700	9 270 618	9 270 671	9 270 724	10 ea.
800	9 270 619	9 270 672	9 270 725	10 ea.
900	9 270 620	9 270 673	9 270 726	10 ea.
1000	9 270 621	9 270 674	9 270 727	10 ea.
1200	9 270 622	9 270 675	9 270 728	10 ea.

Planning / installation dimensions

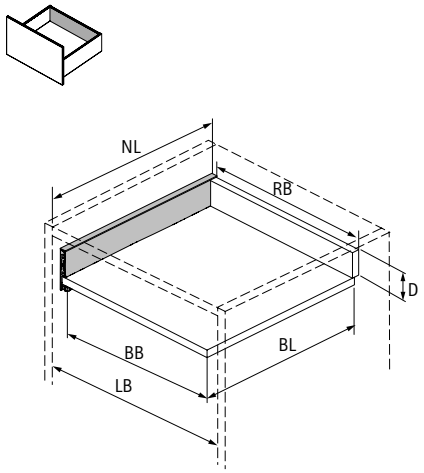

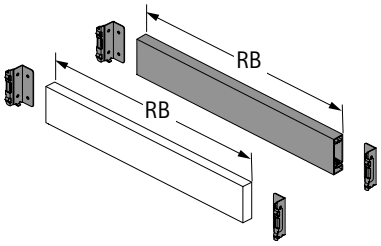

BL	NL - 21
BB	LB - 24
RB	LB - 41
D H 101	54
D H 139	92
D H 187	140,5
D H 251	204,5

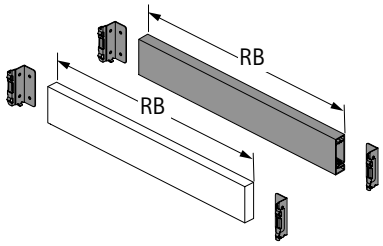

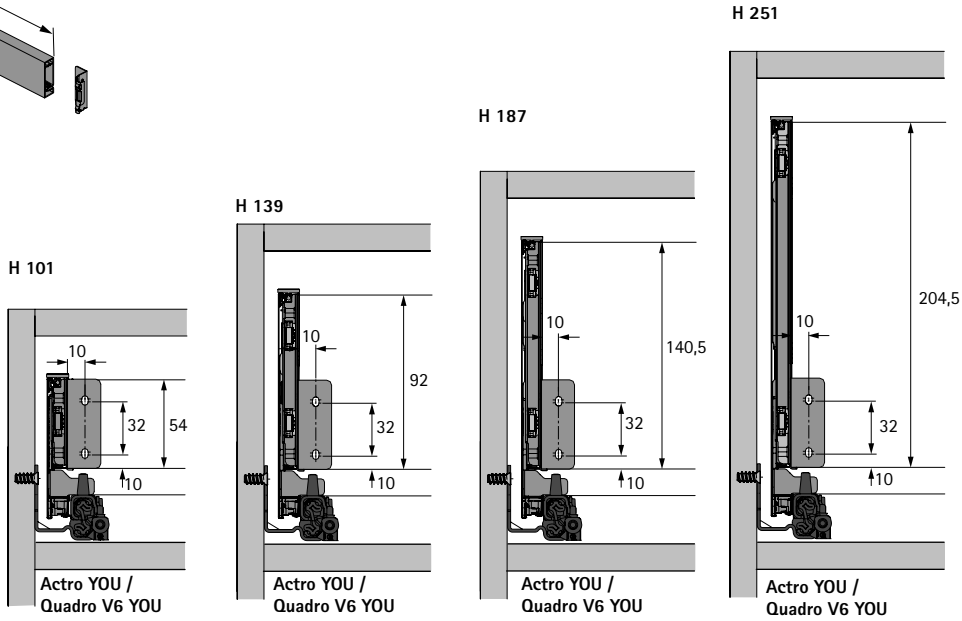

Example application with narrow base unit

- Cabinet body height 750 mm max.
- Cabinet body width with Silent System, 120 mm min.
- Cabinet body width 300 mm max.
- Actro YOU / Quadro YOU drawer runner is required on the left and right, mounted diagonally
- Other configurations are also possible
- Total load capacity 20 kg max.

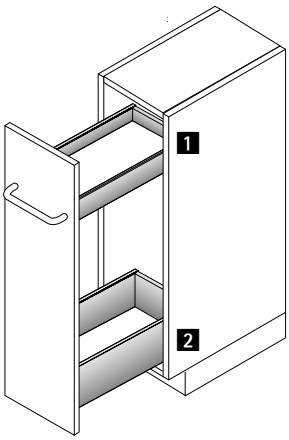

Example application

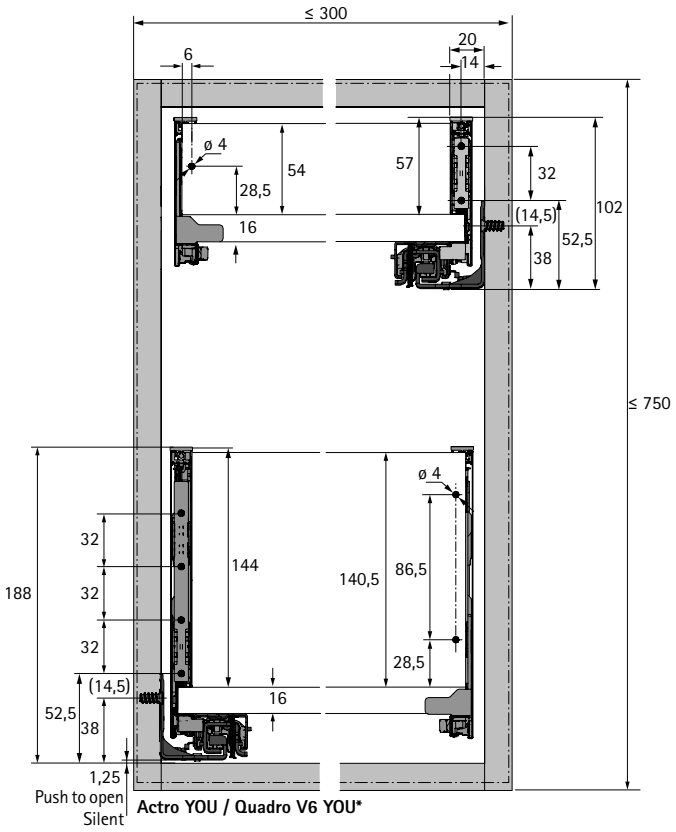

No.	Application	see pages
1	AvanTech YOU drawer Actro YOU / Quadro YOU with Silent System	8 - 18 60 - 65
2	AvanTech YOU pot-and-pan drawer Actro YOU / Quadro YOU with Silent System	20 - 26 60 - 65

Example showing use of drawer with bottom cutout

- For utilising the space below the sink
- Other configurations are also possible

Example application

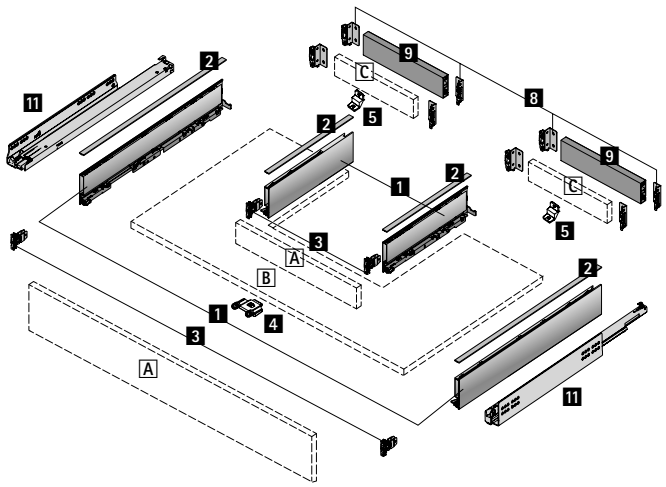

No.	Application	see pages
1	AvanTech YOU drawer side profile, 2 each, left and right	9
2	AvanTech YOU design profile, 4 each	14
3	AvanTech YOU drawer front connector for drawer side profile, 4 each	14
4	Front stabiliser	56
8	AvanTech YOU rear panel connector, 2 each, left and right	
9	AvanTech YOU rear panel profile for cutting to length, or C wooden rear panel	38
11	Actro YOU / Quadro YOU drawer runner with Silent System	60 - 61 / 64 - 65
A	Front panel	
B	Bottom panel (material thickness 16 mm)	
C	Wooden rear panel (material thickness 16 mm)	

Example showing use of drawer with bottom cutout

Planning / installation dimensions

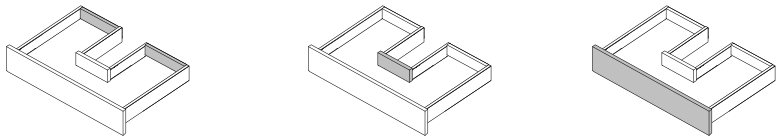

* All dimensions identical for Actro YOU and Quadro YOU

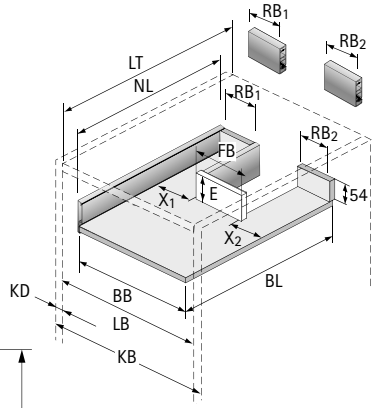

Example with height 101

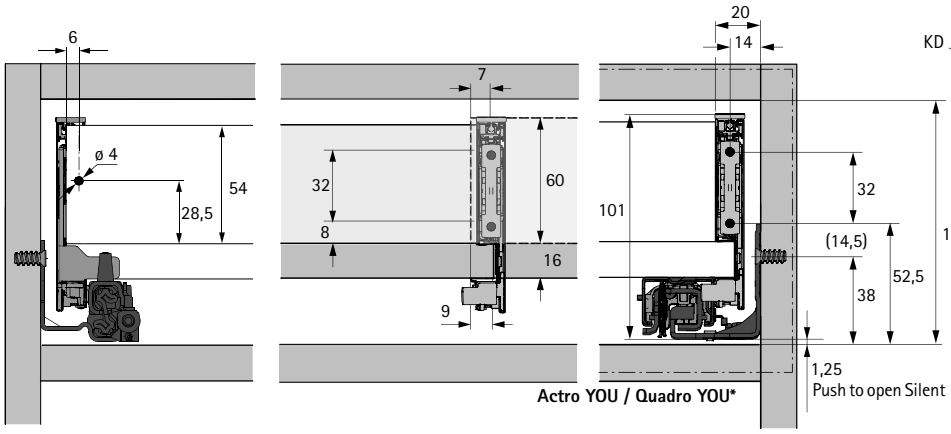

Actro YOU / Quadro YOU*

BB Bottom panel width	KB Cabinet body width	NL Nominal length	LB Clear inside width
BL Bottom panel length	RB Rear panel width	KD Cabinet body side thicknesses	FB Front width

Dimension	mm
BL	NL - 21
BB	LB - 24
RB1	X1
RB2	X2
E	≥ 60
FB	B - X1 - X2 + 18

interzum
Award
High product quality
DESIGN
AWARD
2022
reddot winner 2022

AvanTech YOU fascinates!

The AvanTech YOU drawer system provides a huge amount of design flexibility in terms of colour, shape and material, giving you the key to successfully turning your own furniture design ideas into reality. Incredibly easy to achieve with AvanTech YOU, whatever personal character you want a design to reflect is a matter for you to decide. With a simple click, design profiles or DesignCapes conjure an accentuated, visual transformation. AvanTech YOU Inlay, the elegant drawer side profile with glass inlay, does away with the boundaries between space and furniture and focuses the eye on furniture design. Or you can feature your drawers with the new LED signature lighting to make even more of a 'wow' effect. Printing your logo on the drawer side profile completes your design. With this versatile system, however, you can let your own imagination run free. With the option of using any chosen materials, your ideas become distinctive solutions that stand apart! Whether for use in the bathroom, living room or kitchen – your wishes are easily fulfilled with the broad diversity of this product range and the many different ways of creating furniture with a look of individuality.

Already customised as standard.
Use the many different ways of shaping and customising the design of your furniture. Give your furniture unmistakable character and respond quickly to the latest design trends. The quickest way: Use the design profiles in standard design. Design profiles in the drawer side profile colour finishes of white, silver, anthracite or in aluminium look, stainless steel look, chrome look, chrome look, walnut look or oak look.

2 B Design profile in accent colour

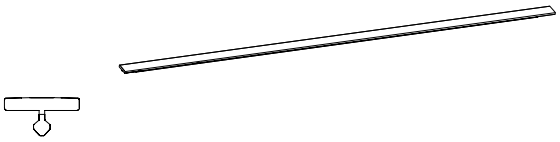

- Any chosen top edge for drawer side profile
- For clipping on
- Plastic, foil wrapped

Nominal length mm	Order no. / Colour					PU
	aluminium look	chrome look	stainless steel look	oak look	walnut look	
270	9 255 759	9 255 777	9 255 768	9 255 786	9 255 795	100 ea.
300	9 255 760	9 255 778	9 255 769	9 255 787	9 255 796	100 ea.
350	9 255 761	9 255 779	9 255 770	9 255 788	9 255 797	100 ea.
400	9 255 762	9 255 780	9 255 771	9 255 789	9 255 798	100 ea.
450	9 255 763	9 255 781	9 255 772	9 255 790	9 255 799	100 ea.
500	9 255 764	9 255 782	9 255 773	9 255 791	9 255 800	100 ea.
550	9 255 765	9 255 783	9 255 774	9 255 792	9 255 801	100 ea.
600	9 255 766	9 255 784	9 255 775	9 255 793	9 255 802	100 ea.
650	9 255 767	9 255 785	9 255 776	9 255 794	9 255 803	100 ea.

2 C Customisable design profile

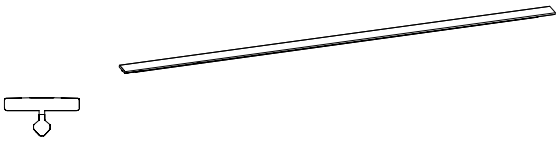

- Support for any chosen versions of the design profile
- Length 2000 mm
- For clipping on
- Grey plastic with adhesive strip

Order no.	PU
9 255 831	1 ea.

DesignCapes in anodised aluminium and stainless steel look can be used to create a wide variety of eye catchers even within the standard range. But here too, the AvanTech YOU platform offers further versatile customisation options if you do prefer your own materials and colour trends.

12 DesignCape

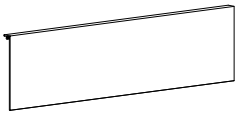

- For clipping on
- Length 2000 mm
- aluminium

Set comprises:
- Aluminium profile
- Fixing material

Advice:
For further DesignCapes options, please see AvanTech YOU - Customisation made easy

Nominal height mm	Order no.		PU
	aluminium look	stainless steel look	
101	9 257 643	9 257 647	1 set
187	9 257 645	9 257 649	1 set

13 Branding clip

- Available on request with any chosen imprint or customer logo
- For clipping on
- Plastic

Colour	Order no.	PU
silver with Hettich logo	9 257 703	1/200 ea.
white with Hettich logo	9 257 704	1/200 ea.
anthracite with Hettich logo	9 257 705	1/200 ea.
silver (for own branding)	9 270 185	200 ea.
white (for own branding)	9 270 186	200 ea.
anthracite (for own branding)	9 270 187	200 ea.

Advice

- AvanTech YOU drawer 8 - 18
- AvanTech YOU pot-and-pan drawer 20 - 26
- AvanTech YOU Inlay pot-and-pan drawer 28 - 30
- Internal front panel options / rear panel options 32 - 41
- Design options / Illumination / Accessories 42 - 59
- Actro YOU / Quadro YOU drawer runners / Push to open Silent 60 - 67

hettich.com/short/1874ce

- Stunning accent lighting for AvanTech YOU shining either into the drawer or into the room
- Can be retrofitted as an option for system height of 101 / 139 / 187 / 251 mm
- For cutting to length
- Diffuse light, colour temperature 4000K
- 1 set per drawer, including 1 rechargeable battery pack
- Automatic illumination when opening the drawer, switches off when closing the drawer

14 A Illumination design profile

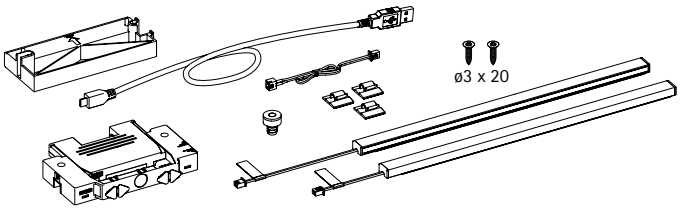

- Rechargeable lithium-ion battery
- Voltage 3.7 V DC
- Capacity 2300 mAh
- Power 8.51 Wh
- Rechargeable via micro USB
- Charging time approx. 4 hours with 500 mA charger
- Not compatible with front panel for internal drawer

Set comprises:
- 2 LED light sets
- 1 magnet
- 1 rechargeable battery
- 1 rechargeable battery holder, self adhesive
- 1 adapter for steel rear panel
- 3 cable holder, self adhesive
- 1 charging cable, micro USB B
- 1 extension cable
- Fixing material

Nominal length mm	**Order no. / Colour**		PU
	anthracite	**stainless steel look**	
270	**9 326 922**	**9 326 873**	1 set
300	**9 326 923**	**9 326 874**	1 set
350	**9 326 924**	**9 326 875**	1 set
400	**9 326 925**	**9 326 876**	1 set
450	**9 326 926**	**9 326 877**	1 set
500	**9 326 927**	**9 326 878**	1 set
550	**9 326 928**	**9 326 879**	1 set
600	**9 326 929**	**9 326 880**	1 set
650	**9 326 930**	**9 326 921**	1 set

Advice

- AvanTech YOU drawer 8 - 18
- AvanTech YOU pot-and-pan drawer 20 - 26
- AvanTech YOU Inlay pot-and-pan drawer 28 - 30
- Internal front panel options / rear panel options 32 - 41
- Design options / Illumination / Accessories 42 - 59
- Actro YOU / Quadro YOU drawer runners / Push to open Silent 60 - 67

hettich.com/short/892f59

- Stunning accent lighting for AvanTech YOU
- Can optionally be retrofitted
- Diffuse light, colour temperature 4000K
- 1 set per drawer, including 1 rechargeable battery pack
- Automatic illumination when opening the drawer, switches off when closing the drawer

14 B Illumination Inlay drawer side

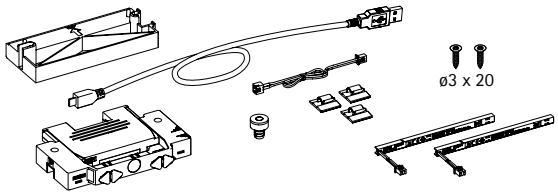

- Rechargeable lithium-ion battery
- Voltage 3.7 V DC
- Capacity 2300 mAh
- Power 8.51 Wh
- Rechargeable via micro USB
- Charging time approx. 4 hours with 500mA charger

Set comprises:
- 2 LED light sets
- 1 magnet
- 1 rechargeable battery
- 1 rechargeable battery holder, self adhesive
- 1 adapter for steel rear panel
- 3 cable holder, self adhesive
- 1 charging cable, micro USB B
- 1 extension cable
- Fixing material

Order no.	PU
9 305 747	1 set

Advice

- AvanTech YOU drawer 8 - 18
- AvanTech YOU pot-and-pan drawer 20 - 26
- AvanTech YOU Inlay pot-and-pan drawer 28 - 30
- Internal front panel options / rear panel options 32 - 41
- Design options / Illumination / Accessories 42 - 59
- Actro YOU / Quadro YOU drawer runners / Push to open Silent 60 - 67

hettich.com/short/892f59

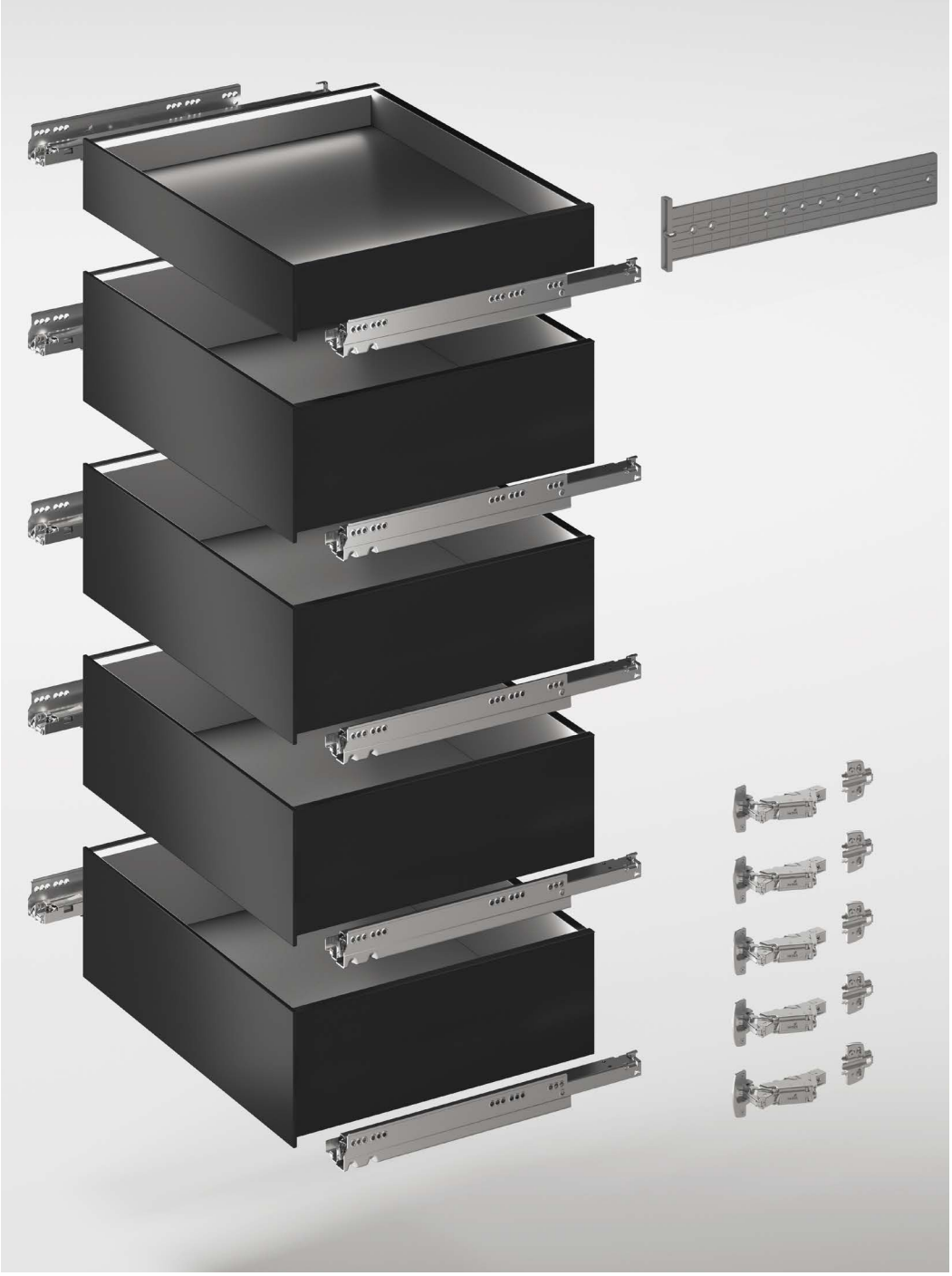

What is Light Tower?

Light Tower is a sophisticated and ergonomically -advanced storage solution for optimal management of a cabinet's interior. It is based on Hettich's design-led premium drawer system AvanTech YOU and comprises a unit with five drawer boxes, each individually illuminated. Smooth, effortless opening and closing is assured thanks to high-quality 30 kg runners and the Light Tower unit comes with a jig to help mark up the cabinet for fitting the runners with precision.

Connection for front panels from 10 mm

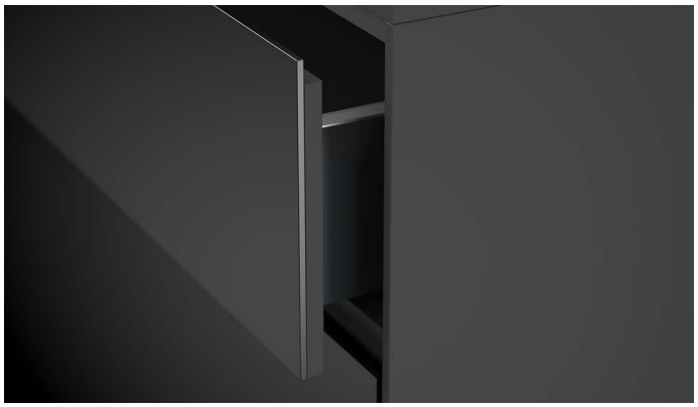

- For front panel thicknesses from 10 mm
- Socket for optimum fit in soft materials (MDF transverse tensile strength > 0.6 N/mm^2, Chipboard transverse tensile strength > 0.45 N/mm^2)
- Self tapping screws for optimum fit in hard materials (e.g. solid surface material, natural stone, plastic, ceramic)
- Use with standard front panel connections
- The attachment method must be suitable for the type and quality of door material and tested for a secure fit

Connector for front panel thicknesses from 10 mm

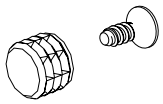

Set comprises:
- 10 sockets, ø 10 x 8 mm
- 10 self tapping screws, ø 3.5 x 16 mm

Order no.	PU
9 268 149	1 set

Installation aid

Chipboard, MDF

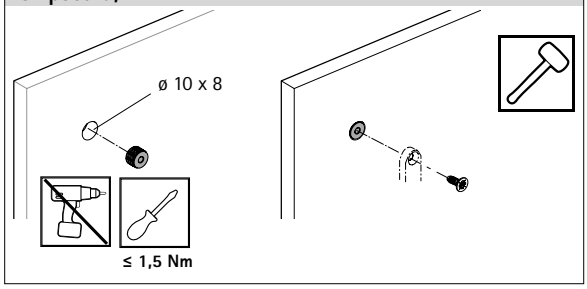

HPL, solid surface materials

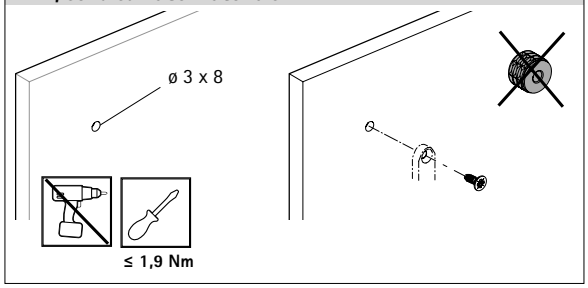

The attachment method must be suitable for the type and quality of door material and tested for a secure fit.

Advice

- AvanTech YOU drawer 8 - 18
- AvanTech YOU pot-and-pan drawer 20 - 26
- AvanTech YOU Inlay pot-and-pan drawer 28 - 30
- Internal front panel options / rear panel options 32 - 41
- Design options / Illumination / Accessories 42 - 59
- Actro YOU / Quadro YOU drawer runners / Push to open Silent 60 - 67

hettich.com/short/c4a03a

4 A Front stabiliser

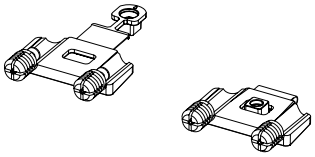

- For stabilising wide and/or high front panels
- Recommended for use in cabinet body widths 600 mm and over and / or front panel heights of 450 mm and over
- Plastic, anthracite

Order no.	PU
9 123 080	150 ea.

Glass insert for Inlay drawer side profile

- Clear glass, 10 mm, one long edge satin finished

Nominal length mm	Order no.	PU
350	**9 283 178**	1 set
400	**9 283 179**	1 set
450	**9 283 180**	1 set
500	**9 283 181**	1 set
550	**9 283 182**	1 set
600	**9 283 183**	1 set
650	**9 283 184**	1 set

Glass insert for customisable internal front panel

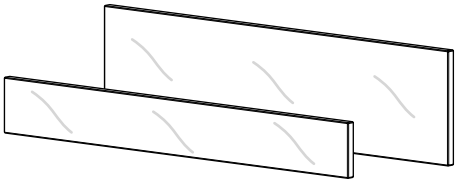

- For cabinet body side thickness KD 16 mm, KD 18 mm or KD 19 mm
- For customisable internal front in half height (66 mm) or full height (130 mm)
- Clear glass
- One long edge satin finished

Cabinet body width mm	**Order no. / Height / Cabinet body side thickness mm**		PU
	66 mm	**130 mm**	
	18 mm	**18 mm**	
450	**9 283 228**	**9 283 233**	1 ea.
600	**9 283 229**	**9 283 235**	1 ea.
900	**9 283 231**	**9 283 237**	1 ea.
1200	**9 283 232**	**9 283 238**	1 ea.

Direct fixing screws

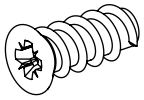

- Countersunk head
- Pozidrive screw
- Steel

Dimensions mm	Finish	Order no.	PU
6 ø x 14	nickel plated	**9 137 114**	200 ea.
6.3 ø x 14	galvanised	**0 051 265**	200 ea.

Chipboard screws, countersunk head

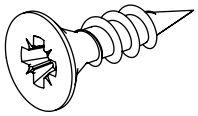

- Countersunk head
- Pozidrive screw
- Steel

Dimensions mm	Finish	Order no.	PU
ø 3.5 x 16	nickel plated	**0 071 925**	200 ea.
ø 4 x 16	nickel plated	**0 010 085**	200 ea.

Chipboard screws, panhead

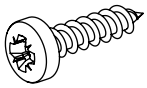

- Panhead
- Pozidrive screw
- Steel

Dimensions mm	Finish	Order no.	PU
ø 3,5 x 6,5	galvanised	**9 278 225**	200 ea.
ø 3.5 x 12	galvanised	**0 045 167**	200 ea.
ø 3.5 x 20	galvanised	**0 045 168**	200 ea.
ø 3,5 x 30	galvanised	**9 278 224**	200 ea.

Self tapping screw, panhead

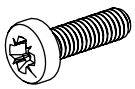

- Panhead
- Pozidrive screw
- Steel

Dimensions mm	Finish	Order no.	PU
ø 3,5 x 12	galvanised	**9 279 197**	200 ea.

In-Frame Solution / Drawer Spacer 25 mm

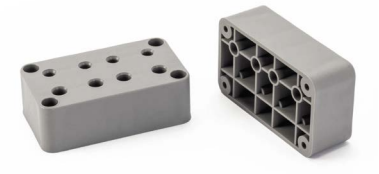

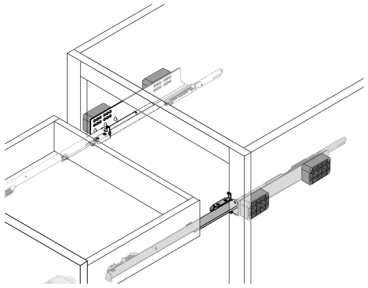

- Grey

Set comprises:
- 4 Plastic Grey Spacers - 76 mm x 44 mm x 25 mm
- 8 x 38 mm Euro Screws

Order no.	PU
9 307 809	1/100 set

AvanTech YOU double walled drawer system

- **Actro YOU drawer runner with Silent System, optionally available with Push to open Silent**
- **Load classes XS (10 kg) / L (40 kg) / XL (70 kg)**

11 A Actro YOU drawer runner with Silent System

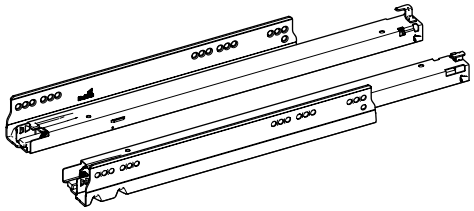

- Full extension runner for combining with AvanTech YOU system drawer or wooden drawer with catches
- Integrated **Silent System**
- Optional: Push to open Silent
- Load classes XS (10 kg) / L (40 kg) / XL (70 kg)
- Load capacity to EN 15338, Level 3
- Galvanised steel

Nominal length mm	**Order no.**	PU	**Order no. / Mounting side**		PU
	left and right		**left**	**right**	
Load class XS (10 kg)					
270	**9 318 154**	1 pair	**9 318 145**	**9 318 146**	10 ea.
300	**9 318 156**	1 pair	**9 318 147**	**9 318 148**	10 ea.
350	**9 318 160**	1 pair	**9 318 149**	**9 318 150**	10 ea.
Load class L (40 kg)					
270	**9 318 186**	1 pair	**9 318 167**	**9 318 170**	10 ea.
300	**9 318 187**	1 pair	**9 318 171**	**9 318 172**	10 ea.
350	**9 318 188**	1 pair	**9 318 173**	**9 318 174**	10 ea.
400	**9 318 190**	1 pair	**9 318 175**	**9 318 176**	10 ea.
450	**9 318 191**	1 pair	**9 318 177**	**9 318 178**	10 ea.
500	**9 318 192**	1 pair	**9 318 179**	**9 318 180**	10 ea.
550	**9 318 194**	1 pair	**9 318 181**	**9 318 182**	10 ea.
600	**9 318 196**	1 pair	**9 318 183**	**9 318 184**	10 ea.
Load class XL (70 kg)					
450	**9 318 215**	1 pair	**9 318 198**	**9 318 199**	10 ea.
500	**9 318 216**	1 pair	**9 318 201**	**9 318 203**	10 ea.
550	**9 318 217**	1 pair	**9 318 208**	**9 318 209**	10 ea.
600	**9 318 218**	1 pair	**9 318 211**	**9 318 212**	10 ea.
650	**9 318 219**	1 pair	**9 318 213**	**9 318 214**	5 ea.

Depth adjustment

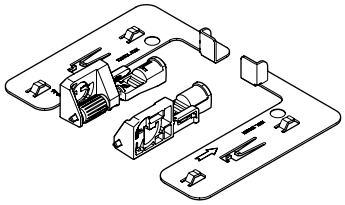

- Tool-less installation and adjustment up to +4 mm
- For optional use with inset front panels
- Steel, grey plastic

Set comprises:
- 2 depth adjusters
- 2 activators

Order no.	PU
9 257 706	1 set

Advice

- AvanTech YOU drawer 8 - 18
- AvanTech YOU pot-and-pan drawer 20 - 26
- AvanTech YOU Inlay pot-and-pan drawer 28 - 30
- Internal front panel options / rear panel options 32 - 41
- Design options / Illumination / Accessories 42 - 59
- Push to open Silent 62 - 63, 67

hettich.com/short/45025e

AvanTech YOU double walled drawer system

- **Actro YOU drawer runner with Silent System, optionally available with Push to open Silent**
- **Load classes XS (10 kg) / L (40 kg) / XL (70 kg)**

Lengthwise cross-section

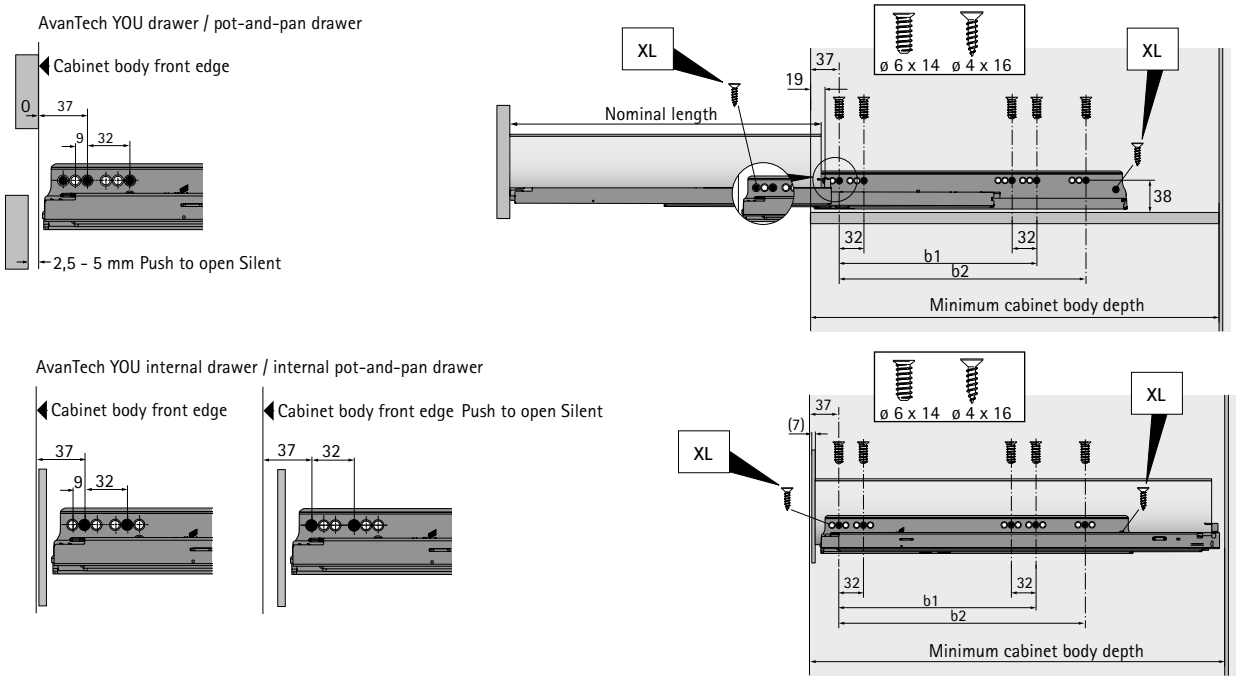

Installation dimensions with Silent System / Push to open Silent

Nominal length mm	Hole spacing b1 mm	Hole spacing b2 mm	Drawer / pot-and-pan drawer Minimum cabinet body depth mm	Internal drawer / internal pot-and-pan drawer Minimum cabinet body depth mm	Internal drawer / internal pot-and-pan drawer Push to open Silent Minimum cabinet body depth mm
270	160		273	282	291
300	160		303	312	321
350	224		353	362	371
400	224		403	412	421
450	256	288	453	462	471
500	256	320	503	512	521
550	256	320	553	562	571
600	256	320	603	612	621
650	256	416	653	662	671

Push to open Silent opening system for Actro YOU

Push to open Silent opening system

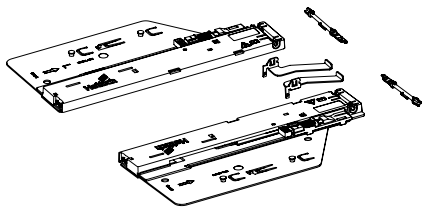

- For optimum performance and activation, fitting an optional synchronisation function is recommended

Set comprises:
- 1 Push to open Silent unit, left and right
- 1 activator, left and right
- 2 adapters for synchronisation

Total weight kg	Load class Actro	Nominal length mm	**Order no.**	PU
< 10	XS (10 kg)	270 - 350	**9 257 890**	1 set
8 - 20	L (40 kg)	270 - 600	**9 257 891**	1 set
10 - 40	L (40 kg)	350 - 600	**9 257 892**	1 set
20 - 70	XL (70 kg)	450 - 650	**9 257 893**	1 set

Recommendation for drawer (front panel height up to approx. 150 mm, light loading)*

Nominal length mm	Nominal width mm 275	300	350	400	500	600	700	800	900	1000	1100	1200
270												
300												
350												
400												
450												
500												
550												
650												

Recommendation for pot-and-pan drawer (front panel height up to approx. 300 mm, medium duty loading)*

Nominal length mm	Nominal width mm 275	300	350	400	500	600	700	800	900	1000	1100	1200
270												
300												
350												
400												
450												
500												
550												
650												

Recommendation for pot-and-pan drawer (front panel height up to approx. 300 mm, carrying heavy load, e.g. with stacks of plates)*

Nominal length mm	Nominal width mm 275	300	350	400	500	600	700	800	900	1000	1100	1200
270												
300												
350												
400												
450												
500												
550												
650												

Order no. Push to open Silent:	**9 257 890**	**9 257 891**	**9 257 892**	**9 257 893**

* Recommendations for applications (front panel 19 mm chipboard, normal household loading), please refer to our online configurator to get more exact recommendations for customer chosen front panel dimensions and materials.

Optional synchronisation for Push to open Silent

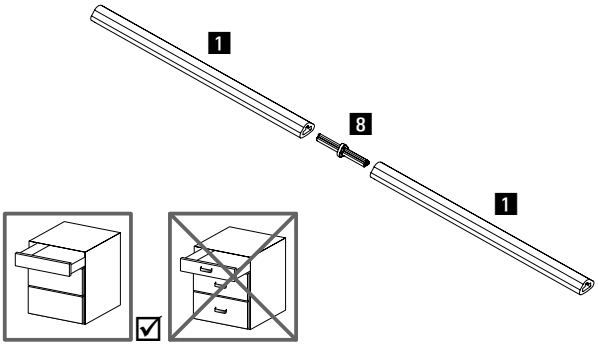

Synchronisation bar:
- For cutting to length, 1038 mm
- Aluminium, anodised

Connector:
- For extending synchronisation bar / optimising synchronisation bar offcut waste
- Plastic, grey

Article	Order no.	PU
1 Synchronisation bar, 1038 mm	**9 236 181**	1/100 ea.
8 Connector	**9 221 295**	1/20 ea.

Optional multi-synchronisation for Push to open Silent

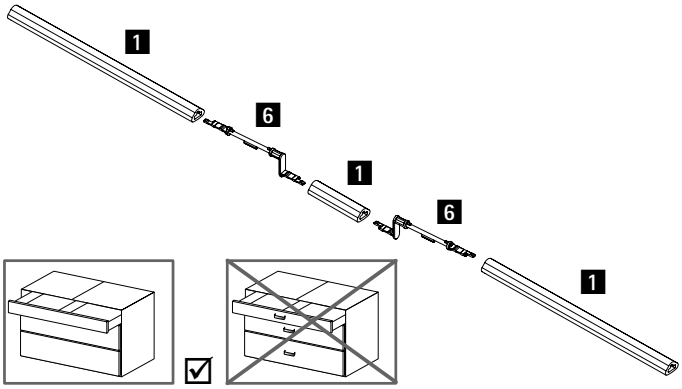

- Use recommended in conjunction with two drawers connected by one front panel
- Aluminium, anodised, grey plastic

Article	Order no.	PU
1 Synchronisation bar, 1038 mm	**9 236 181**	1/100 ea.
6 Push to open Silent multi synchronisation adapter	**9 278 452**	1/20 ea.

Flexible adapter for Push to open Silent synchronisation

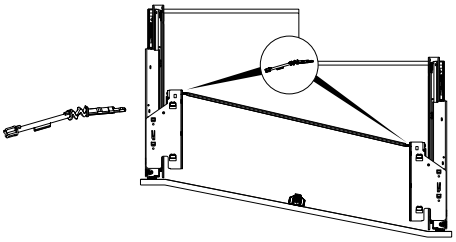

- For use in conjunction with lowered drawer runners with angled or curved fronts
- Depth offset max. 150 mm
- Angle at synchronisation bar max. 25 °
- Replaces the adapter for synchronisation in the Push to open Silent set

Order no.	PU
9 262 213	20 ea.

Deflector for Push to open Silent synchronisation

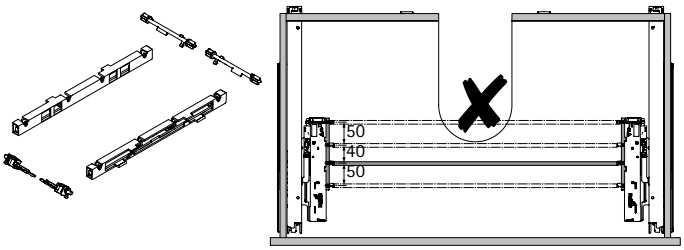

- For use, e.g. with U-bend applications
- Permits synchronisation in 3 different depth positions

Set comprises:
- 2 housings with premounted deflection bar
- 2 adapters for Push to open unit
- 2 adapters for synchronisation bar

Order no.	PU
9 278 453	1 set

Advice

- AvanTech YOU drawer 8 - 18
- AvanTech YOU pot-and-pan drawer 20 - 26
- AvanTech YOU Inlay pot-and-pan drawer 28 - 30
- Internal front panel options 32 - 37
- Design options / Illumination / Accessories 42 - 59
- Actro YOU / Quadro YOU drawer runners / Push to open Silent 60 - 67

hettich.com/short/370f63

- **Quadro YOU drawer runner with Silent System, optionally with Push to open Silent**
- **Load classes XS (10 kg) / M (30 kg)**

11 B Quadro YOU drawer runner with Silent System

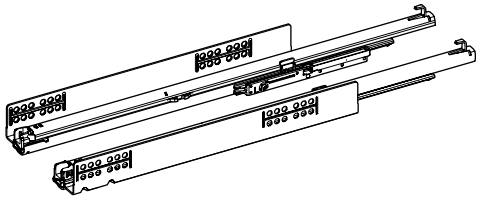

- Full extension runner for combining with AvanTech YOU system drawer or wooden drawer with catches
- Integrated **Silent System**
- Optional: Push to open Silent
- Load classes XS (10 kg) / M (30 kg)
- Load capacity to EN 15338, Level 3
- Galvanised steel

Nominal length mm	**Order no. left and right**	PU	**Order no. / Mounting side left**	**right**	PU
Load class XS (10 kg)					
270	**9 256 953**	1 pair	**9 256 944**	**9 256 945**	20 ea.
300	**9 256 954**	1 pair	**9 256 946**	**9 256 947**	20 ea.
350	**9 256 956**	1 pair	**9 256 950**	**9 256 951**	20 ea.
Load class M (30 kg)					
270	**9 256 883**	1 pair	**9 256 854**	**9 256 855**	20 ea.
300	**9 256 884**	1 pair	**9 256 856**	**9 256 857**	20 ea.
350	**9 256 886**	1 pair	**9 256 860**	**9 256 861**	20 ea.
400	**9 256 888**	1 pair	**9 256 864**	**9 256 865**	20 ea.
450	**9 256 890**	1 pair	**9 256 868**	**9 256 869**	20 ea.
500	**9 256 892**	1 pair	**9 256 872**	**9 256 873**	20 ea.
550	**9 256 894**	1 pair	**9 256 876**	**9 256 877**	20 ea.
600	**9 256 896**	1 pair	**9 256 880**	**9 256 881**	20 ea.

Advice

- AvanTech YOU drawer 8 - 18
- AvanTech YOU pot-and-pan drawer 20 - 26
- AvanTech YOU Inlay pot-and-pan drawer 28 - 30
- Internal front panel options / rear panel options 32 - 41
- Design options / Illumination / Accessories 42 - 59
- Actro YOU / Quadro YOU drawer runners / Push to open Silent 60 - 67

hettich.com/short/45025e

AvanTech YOU double walled drawer system

- **Quadro YOU drawer runner with Silent System, optionally with Push to open Silent**
- **Load classes XS (10 kg) / M (30 kg)**

Lengthwise cross-section

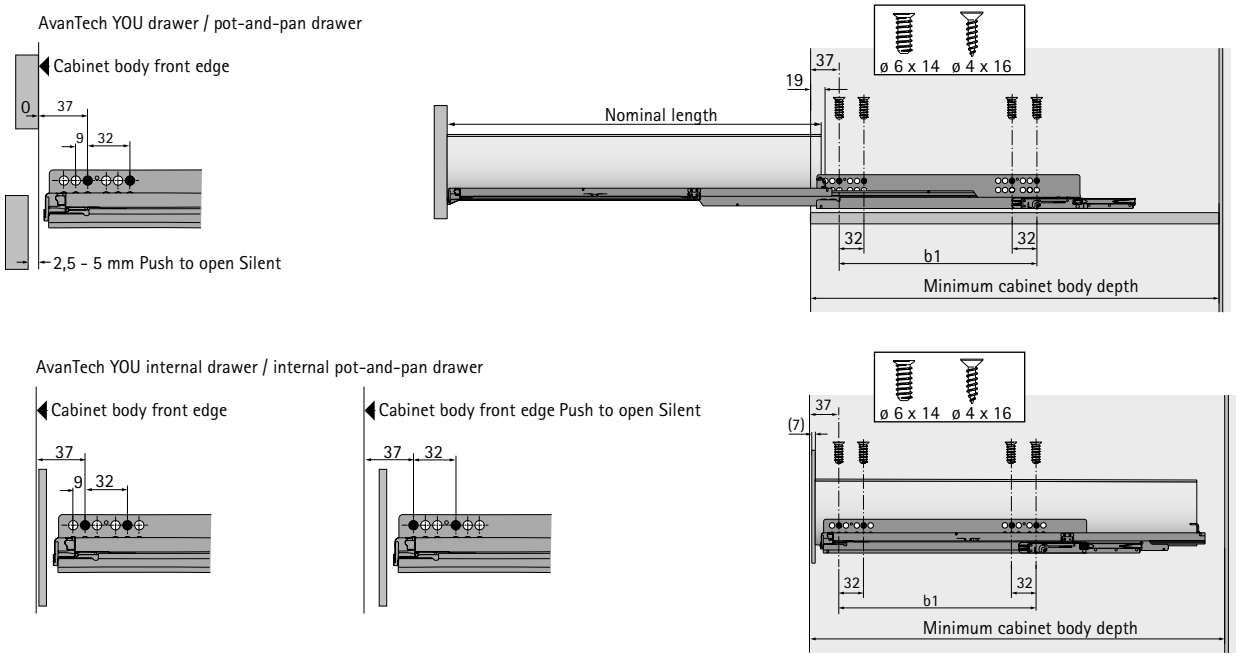

Installation dimensions with Silent System / Push to open Silent

Nominal length mm	Hole spacing b1 mm	Drawer / pot-and-pan drawer Minimum cabinet body depth mm	Internal drawer / internal pot-and-pan drawer Minimum cabinet body depth mm	Internal drawer / internal pot-and-pan drawer Push to open Silent Minimum cabinet body depth mm
270	160	273	282	291
300	160	303	312	321
350	224	353	362	371
400	224	403	412	421
450	256	453	462	471
500	256	503	512	521
550	256	553	562	571
600	256	603	612	621

Plug for pull out shelves

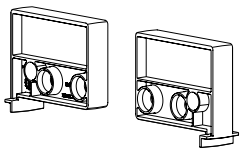

- For pull-out shelves / drawers with flush bottom panel
- The length of the drawer (NL) is reduced by 10 mm
- For Actro 5D, Actro YOU and Quadro YOU Runners
- Plastic, grey

Order no.	PU
9 257 733	1 set

Push to open Silent opening system for Quadro YOU

Push to open Silent opening system

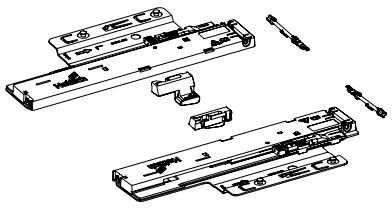

- For optimum performance and activation, fitting an optional synchronisation function is recommended

Set comprises:
- 1 Push to open Silent unit, left and right
- 1 activator, left and right
- 2 adapters for synchronisation

Total weight kg	Load class for Quadro	Nominal length mm	**Order no.**	PU
< 10	XS (10 kg)	270 - 350	**9 257 894**	1 set
8 - 20	M (30 kg)	270 - 600	**9 257 895**	1 set
10 - 30	M (30 kg)	350 - 600	**9 257 896**	1 set

Recommendation for drawer (front panel height up to approx. 150 mm, light loading)*

	Nominal width mm												
Nominal length mm	275	300	350	400	450	500	550	600	700	800	900	1000	1200
270													
300													
350													
400													
450													
500													
550													
600													

Recommendation for pot-and-pan drawer (front panel height up to approx. 300 mm, medium duty loading)*

	Nominal width mm												
Nominal length mm	275	300	350	400	450	500	550	600	700	800	900	1000	1200
270													
300													
350													
400													
450													
500													
550													
600													

Recommendation for pot-and-pan drawer, heavy duty (front panel height up to approx. 300 mm, heavy duty loading, e.g. with stacks of plates)*

	Nominal width mm												
Nominal length mm	275	300	350	400	450	500	550	600	700	800	900	1000	1200
270													
300													
350													
400													
450													
500													
550													
600													

Order no. Push to open Silent:	**9 257 894**	**9 257 895**	**9 257 896**

* Recommendations for applications (front panel 19 mm chipboard, normal household loading), please refer to our online configurator to get more exact recommendations for customer chosen front panel dimensions and materials.

Optional synchronisation for Push to open Silent

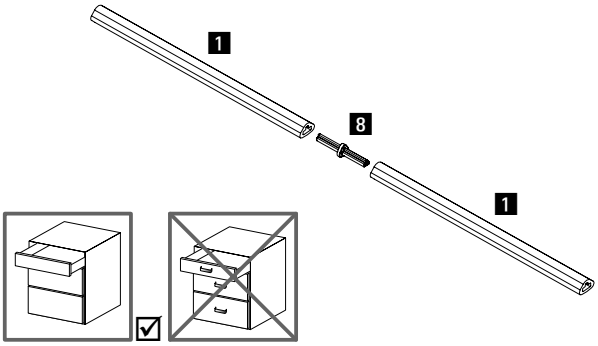

Synchronisation bar:
- For cutting to length, 1038 mm
- Aluminium, anodised

Connector:
- For extending synchronisation bar / optimising synchronisation bar offcut waste
- Plastic, grey

Article	Order no.	PU
1 Synchronisation bar, 1038 mm	**9 236 181**	1/100 ea.
8 Connector	**9 221 295**	1/20 ea.

Optional multi-synchronisation for Push to open Silent

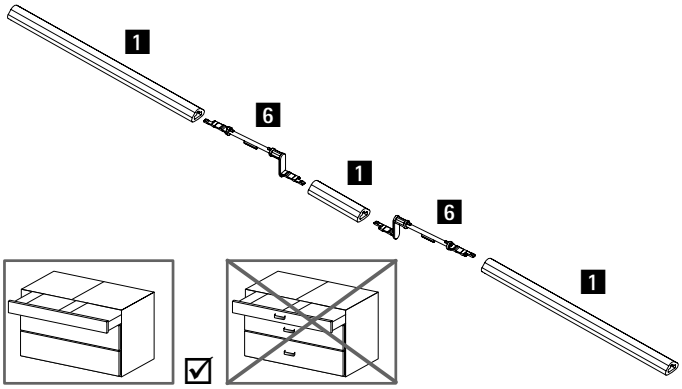

- For two drawers connected by one front panel
- Aluminium, anodised, grey plastic

Article	Order no.	PU
1 Synchronisation bar, 1038 mm	**9 236 181**	1/100 ea.
6 Push to open Silent multi synchronisation adapter	**9 278 452**	1/20 ea.

Flexible adapter for Push to open Silent synchronisation

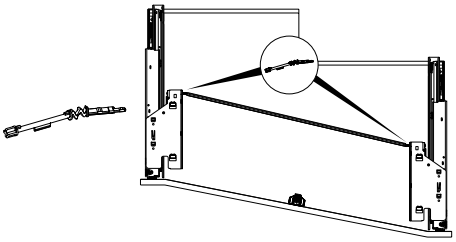

- For offset drawer runners with angled or curved fronts
- Depth offset max. 150 mm
- Angle at synchronisation bar max. 25 °
- Replaces the adapter for synchronisation in the Push to open Silent set

Order no.	PU
9 262 213	20 ea.

Deflector for Push to open Silent synchronisation

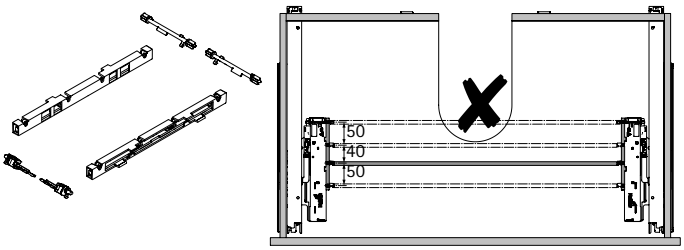

- For use with e.g. U-bend applications
- Permits synchronisation in 3 different depth positions

Set comprises:
- 2 housings with premounted deflection bar
- 2 adapters for Push to open unit
- 2 adapters for synchronisation bar

Order no.	PU
9 278 453	1 set

Advice

- AvanTech YOU drawer 8 - 18
- AvanTech YOU pot-and-pan drawer 20 - 26
- AvanTech YOU Inlay pot-and-pan drawer 28 - 30
- Internal front panel options 32 - 37
- Design options / Illumination / Accessories 42 - 59
- Actro YOU / Quadro YOU drawer runners / Push to open Silent 60 - 67

hettich.com/short/370f63

11 B Quadro YOU drawer runner with Push to open

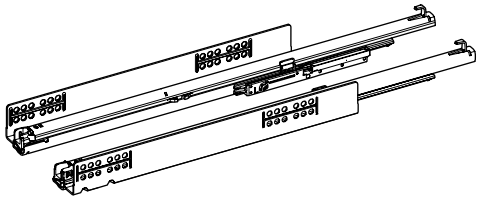

- Full extension runner for combining with AvanTech YOU system drawer or wooden drawer with catches
- Integrated **Push to open** opening mechanism
- Optional: synchronisation
- Load class M (30 kg)
- Load capacity to EN 15338, Level 3
- Galvanised steel

Nominal length mm	**Order no. left and right**	PU	**Order no. / Mounting side left**	**right**	PU
Load class M (30 kg)					
270	**9 256 928**	1 pair	**9 256 899**	**9 256 900**	20 ea.
300	**9 256 929**	1 pair	**9 256 901**	**9 256 902**	20 ea.
350	**9 256 931**	1 pair	**9 256 905**	**9 256 906**	20 ea.
400	**9 256 933**	1 pair	**9 256 909**	**9 256 910**	20 ea.
450	**9 256 935**	1 pair	**9 256 913**	**9 256 914**	20 ea.
500	**9 256 937**	1 pair	**9 256 917**	**9 256 918**	20 ea.
550	**9 256 939**	1 pair	**9 256 921**	**9 256 922**	20 ea.
600	**9 256 941**	1 pair	**9 256 925**	**9 256 926**	20 ea.

Synchronisation for Quadro Push to open

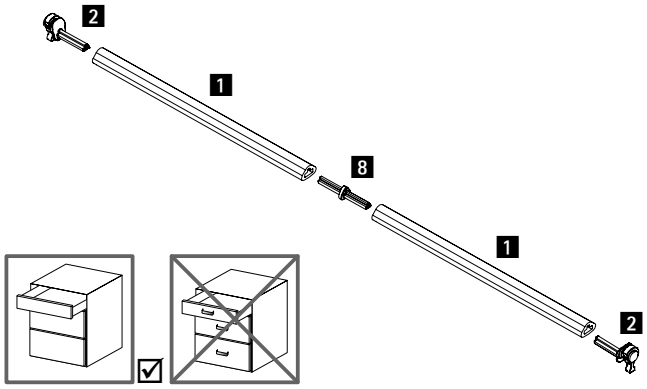

Synchronisation bar:
- For cutting to length, 1038 mm
- Aluminium, anodised

Connector:
- For extending synchronisation bar / optimising synchronisation bar offcut waste
- Plastic, grey

Adapter:
- Type A for Quadro YOU
- Plastic, grey

Article	**Order no.**	PU
1 Synchronisation bar, 1038 mm	**9 236 181**	100 ea.
2 Adapter type A	**9 219 966**	200 ea.
8 Connector	**9 221 295**	20 ea.

Advice

- AvanTech YOU drawer 8 - 18
- AvanTech YOU pot-and-pan drawer 20 - 26
- AvanTech YOU Inlay pot-and-pan drawer 28 - 30
- Internal front panel options / rear panel options 32 - 41
- Design options / Illumination / Accessories 42 - 59
- Push to open Silent 62 - 63, 67

hettich.com/short/45025e

- **Quadro YOU drawer runner with Push to open**
- **Load class M (30 kg)**

Lengthwise cross-section

AvanTech YOU drawer / pot-and-pan drawer

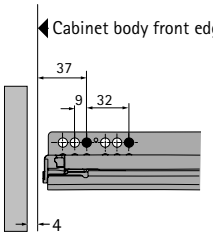

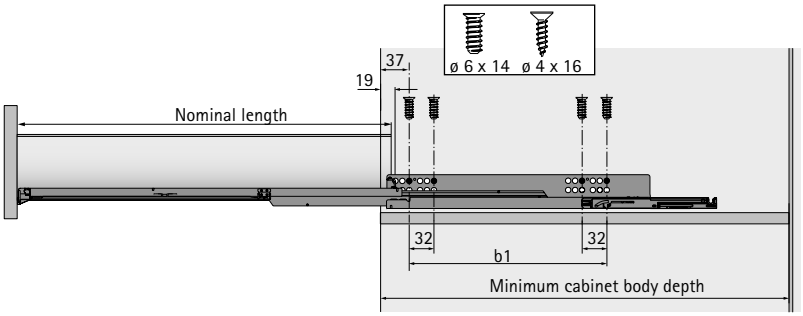

AvanTech YOU internal drawer / internal pot-and-pan drawer

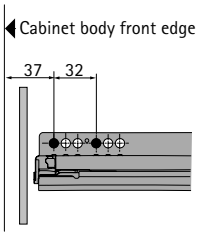

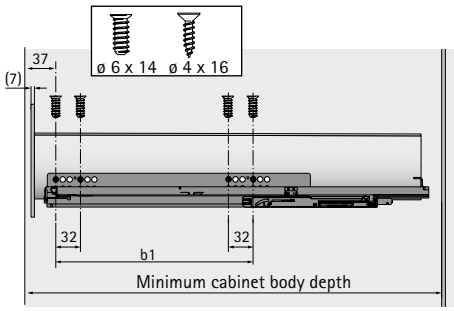

Installation dimensions with Push to open

Nominal length mm	Hole spacing b1 mm	Drawer / pot-and-pan drawer Minimum cabinet body depth mm	Internal drawer / internal pot-and-pan drawer Minimum cabinet body depth mm
270	160	273	291
300	160	303	321
350	224	353	371
400	224	403	421
450	256	453	471
500	256	503	521
550	256	553	571
600	256	603	621

Plug for pull out shelves

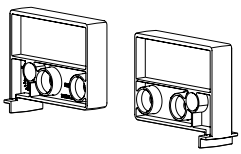

- For pull-out shelves / drawers with flush bottom panel
- The length of the drawer (NL) is reduced by 10 mm
- For Actro 5D, Actro YOU and Quadro YOU Runners
- Plastic, grey

Order no.	PU
9 257 733	1 set

Let's move markets!

Order no. 9 330 025
2204-009_Drawer systems_AvanTech YOU_01/23_HUK_en

Hettich